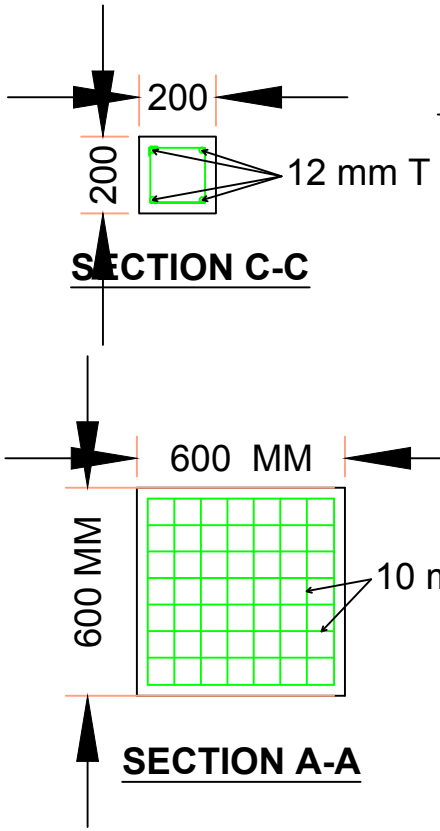

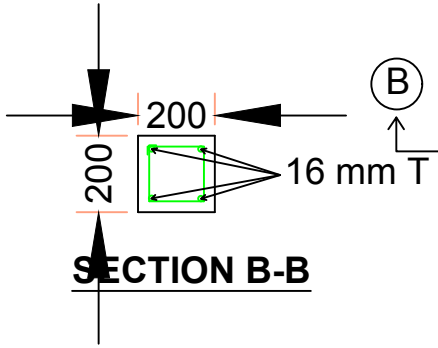

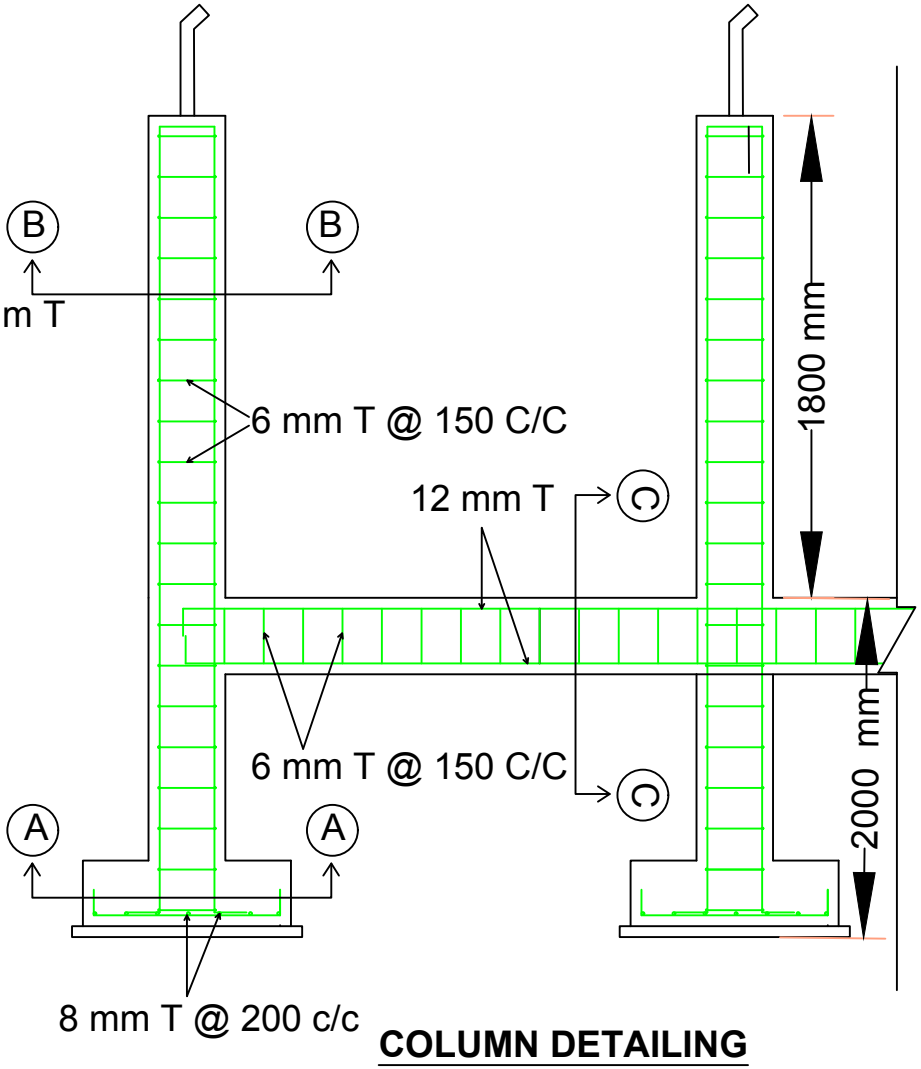

PROPOSED BOUNDARY WALL ON VACANT PLOT AT DAKKOPGRE,TURA