TENDER ID	AMR/VSKP/I01
ATE	13.09.2021

RACPC -2, VISAKHAPATNAM

INVITING TENDERS

Through

E-Tendering

FOR

INTERIOR WORKS AT NEW PREMISES OF RETAIL ASSET CREDIT PROCESSING CENTER-2 (RACPC-II) , VISAKHAPATNAM , ANDHRA PRADESH

Contractors who are on the panel of SBIIMS, Amaravati Circle (LHO) in the appropriate interior work category are only eligible. (Contractors should submit proof of the same) (Contractors are requested to watch website for any corrigendum)

Note: Firm should possess valid digital signature for this e-tender.

Last date for submission of e-Tender: 3.00 P.M. (IST) on 24.09.2021

Opening of e Tenders: 4.00 P.M. (IST) on 24.09.2021

STATE BANK OF INDIA
ASSISTANT GENERAL MANAGER,
RACPC-II
D.NO:58-1426,SHANTINAGAR
NAD KOTHA ROAD VISAKHAPATNAM – 530009 (AP)

CONSULTING ARCHITECTS
DESIGN DISCOVERY
H.NO:8-45-9,OLD CBI DOWN,
VIDYA NAGAR, VISAKHAPATNAM

Signature of contractor

NOTICE INVITING TENDER (NIT)

e-TENDER Notice for Interior Works at New Premises of RACPC-II, Visakhapatnam , Andhra Pradesh**.** Online e-tenders are invited for the above mentioned work from the contractors on the approved panel of SBIIMS, Amaravati Circle in the appropriate interior work category (contractors to furnish proof of empanelment and its validity) (Contractors are requested to watch website for any corrigendum)

1	Name of the work	**INTERIOR WORKS AT NEW PREMISES OF RETAIL ASSET CREDIT PROCESSING CENTER-2 (RACPC II) , VISAKHAPATNAM , ANDHRA PRADESH**
3	Date and Time where tender forms are available	FROM 13.09.2021 to 24.09.2021 at https://etender.sbi/
4	Time and last date of submission of online eTender	Up to 3.00PM on 24.09.2021
5	Place, Time& Address for submission of e tender	Up to 3.00 p.m. on 24.09.2021 **A)** Tender documents at https://etender.sbi/
6	Date, Time and Place of opening of eTenders	On 24.09.2021 at 3.30PM State Bank of India RACPC-II, D.No:58-146, Shantinagar NAD Kotha Road, Visakhapatnam – 530 004 Ph: 9849478763 e- mail id : janardhana.eluru@sbi.co.in
7	Quantum of Earnest Money Deposit (EMD)	Exempted
8	Quantum of Security Deposit _____ (percentage) drawn in favour of _____Payable at ____. Amount of bank guarantee.	1. Initial Security Deposit (ISD) –Exempted 2. Retention Money- Deductable in running bills@ 10% of the value of work and Total deductable is 3% of value of work including ISD.
9	Estimated cost	₹54,95,300.00
10	Terms of payment of Bills, if any (specify the minimum value of work for payment of running account bills)	Running Bill will be paid after Completion of 50% of work .
11	(Penalty clause) Liquidated Damages	@ 0.5% of the value of work per week of delay subject to a maximum penalty of 5% of the value of work would be strictly imposed.
12	Stipulated time for completion of the work/supply.	45 Days
13	Validity period of the tender.	90 days from last date for receipt of tender
14	Eligible Taxes	**A)** Income Tax will be deducted at source as per Govt. Guidelines. **B) Reimbursement of GST will be made only on submission of proper GST invoice as per applicable GST provisions/Rules. The contractor should comply with the following;** • Contractor should have GST Registration Number. • Invoice should specifically/separately disclose the amount of GST levied at applicable rate as per GST provisions/Rules. • In case of Correction in the bills after scrutiny, contractor should submit fresh bills for payment. • Contractor should timely file his GST return in accordance with GST provisions to enable the bank to claim the credit of GST paid to the

Signature of contractor

		contractor. • The GST Number of State Bank Of India are For Andhra Predesh state-37AAACS8577K1ZO For Telangana State -36AAACS8577K1ZQ For Puducherry U.T - 34AAACS8577K1ZU
15	**Electronic Payment**	Electronic payment shall only be permitted. All the contractor must furnish details such as 1) Name of the their bank 2) Name of their branch 3) Account number 4) Name of the account holder as in the bank account 5) IFSC No of the branch 6) PAN number.
16	Agency for arranging e-tender/online bidding	e-Procurement technologies Limited, Ahmedabad. Primary Contact Numbers:- M:- **9081000427, 9904407997** 1. Sujith Nair:- **079-68136857, sujith@eptl.in** 2. Jaymeet Rathod:- **079-68136829, jaymeet.rathod@eptl.in** 3. Vinayak Khambe:- **079-68136835, vinayak.k@eptl.in** 4. Nadeem Mansuri:- **079-68136853, nadeem@eptl.in** 5. Nandan Valera:- **079-68136843, nandan.v@eptl.in** 6. Hemangi Patel:- **079-68136852, hemangi@eptl.in** 7. Kanchan Kumari:- **079-68136820, kanchan.k@eptl.in** Alternate Contact No.:- **SHUBHANGI BANODIYA**:- **079-68136815, 9879996111,** shubhangi@auctiontiger.net You are requested to contact the agency for further guidance on E tendering
17	For further clarifications, if any	All technical matters contact Sri. Janardhana Rao E, Manager (Civil), Administrative Office, State Bank of India, Visakhapatnam,. Contact No-9849478763
18	**Any additional Information**	The quoted rate should be inclusive of materials, labour,wages, fixtures, transportation, installation, all taxes(but excluding GST), wastages, Octroi, machinery, temporary works such as scaffolding, cleaning, overheads, profit, statutory expenses, incidental charges and all related expenses to complete the work

The contractor has to provide their E-mail id, contact nos. and postal address in the bid documents. Henceforth, all official communication form Bank shall be through E-mail and SMS also.

State Bank of India reserves the right to cancel or postpone or modify the tenders at any stage without assigning any reason.

Asst. General Manager
RACPC-II, Visakhapatnam

Signature of contractor

INSTRUCTIONS TO TENDERERS

Online, e tenders are invited for Interior Works At New Premises Of Retail Asset Credit Processing Center-2 (Racpc Ii) , Visakhapatnam , Andhra Pradesh from the Contractors of eligible Category, Empanelled in SBIIMS, Amaravati Circle .(Proof of empanelment in appropriate category and its validity should be submitted) (Contractors are requested to watch website for any corrigendum)

1. Submission of BIDs/Tender Documents: Tenders should be submitted online in the website https://etender.sbi/. In addition, scanned copy of the declaration given in the last page signed with seal and scanned proof of empanelment and its validity should be submitted online with our service provider on the website at: https://etender.sbi/ The tender document is not required to be sent to us in hard copy. The Tender documents with acceptance of all terms and conditions strictly as described in this tender document will be submitted online through M/s e-Procurement Technologies Ltd., Ahmadabad, the out sourcing agency approved by the Bank for e-tendering on the website https://etender.sbi/

2. Exempted

3. Contract documents consist of detailed plans, technical specification, schedule of quantities of the various classes of work to be done, and the set of 'conditions of contract' to be compiled with by the person whose tender may be accepted. The documents are available in the website https://etender.sbi/

4. Exempted

5. Retention Money: From each running bill, an amount at the rate of 10% of the gross value of the running bill shall be recovered as retention money, till the total retention amount including ISD amounts already with the Bank become 3% of the value of the contract amount. This amount is called as Total Security Deposit. The total security deposit will be kept with the Bank. Out of Total Security Deposit 50% of the total security deposit amount shall be refunded without interest to the contractor on issuance of virtual completion certificate by the Architect/Bank/SBIIMS and the Contractor's removal of his materials, equipment, labour force, temporary sheds, stores, site office etc. and on receipt of physical possession of the site by the Bank. The remaining 50% of the total security deposit may be refunded 15 days after the end of defects liability period (6 months), provided he has satisfactorily carried out all the works and attended to rectification of all defects in accordance with the conditions of the contract. In case of failure on the part to do so, the cost of rectifying the defects through any other agency shall be deducted from the amount of security deposit due to the contractor.
Completion of work i) The work shall be considered as complete only when the certificate of virtual completion is issued by the Bank, ii) The 'defects liability period' as prescribed in the contract shall commence only from date of such virtual completion.iii) Any defect that may appear within the defects liability period shall be rectified by the contractor within reasonable time on receipt of necessary instructions from Bank to that effect.

The acceptance of a tender will rest with the Competent Authority, who does not bind himself to accept the lowest tender and reserves to himself the authority to reject any or all of the tenders received, without assigning any reasons. All tenders in which any of the prescribed conditions are not fulfilled, or are incomplete in any respect are liable to be rejected.

6. All compensation or other sums of money payable by the Contractor to Clients under the terms of this contract may be deducted from the security deposit, or from any sum that may be or may become due to the Contractor on any account whatsoever and in the event of the Security Deposit being reduced by reasons of any such deductions, the Contractor shall within 7 days of being asked to do make good in by DD any sum which have been deducted from his security deposit.

7. Tender containing any condition leading to unknown / indefinite liability, are liable to be summarily rejected.

8. Canvassing in connection with tenders is strictly prohibited and the tenders submitted by the contractors who resort to canvassing will be liable to rejection.

Signature of contractor

9. The tenderer should quote their (own) rates for undertaking the work.

10. GST as applicable will be reimbursed by bank as specified in NIT.

11. All taxes other than GST, other statutory obligation in respect of this contract, as applicable, shall be payable by contractor including transportation and TA / DA of the workers at site and the Bank will not entertain any claim whatsoever in this respect

12. I.T. will be recovered @ 2 % plus surcharge or as applicable as per Government Rules

13. Time is the essence of the contract. The work should be completed within the time mentioned in NIT from the date of the work order issued to the contractor to commence the work. The successful Contractor will have to give CPM/PERT chart of various activities of works to be done so that the work gets completed within the stipulated time. The chart shall be submitted within 7 days from the date of acceptance of the tender.

14. Tenders for works shall remain open for acceptance for a period of 90 days from the last date of tenders. If the tenderer withdraws his tender before the expiry of the said period or makes any modifications in terms and condition of the tender which are not acceptable to the Bank, then the Bank without prejudice to any other right or remedy is at liberty to forfeit the earnest money.

15. The successful tenderer, after the work is awarded, he will have to enter into an agreement wiith the competent authority of the bank.

16. The tenderer, must co-ordinate with the other agencies such as (I) Electrical (II) Air – Conditioning etc.

17. The tenderer should visit the site to ascertain the working conditions and local authority regulations / restrictions if any and other information required for the proper execution of the work. The work should be carried out at any floor.

18. The work is to be carried out on different floors level depending upon the nature of work. Please note that materials and machines are required to be carried on head load and the same must be accounted in the costing. Please note that no separate cost shall be allowed for carting and shifting of materials.

19. The quantities of various items given in the schedule of quantities are approximate. The quantities of work may vary at time of allotment / execution of work. Bank reserves the right to omit / delete any item(s) of work from the schedule at the time of allotment / before. Contractor will be paid for the actual work done at the site duly verified by the concerned official of the Bank

20. The unit price shall be deemed to be fixed price. In case of extra items, a record of labour charges paid shall be maintained and shall be presented regularly to the Employer's for checking. The settlement will be made based on figures arrived at jointly and taking unit price given in the contract assigned to the successful Tenderer. In case of extra items where similar or comparable items are quoted in the tender, extra rates shall be based on tender rates.

21. If the rate quoted by the contractor for any item / items are not workable or abnormally lower than the market rate, the Bank may demand Bank guarantee from the contractor for satisfactory completion of these work. The bank guarantee amount will be not less than 50% of the estimated amount of the items for which the rates are not workable or abnormally low. This bank guarantee will be released after completion of these works (unworkable and abnormally low rated items) to the satisfaction of the Bank.

Signature of contractor

22. The contractor shall submit the bar chart/ CPM/ PERT as well as shall submit the insurance cover for the work in the form of CAR policy and Third Party Insurance within seven (7) days from the acceptance of work order.

23. The work has to be started within 7 (Seven) Days from the date of receipt of work order/ mark out at site; whichever is later. In case of work not being started within this stipulated period, the Bank reserves the right to cancel the work order duly forfeiting the Earnest money deposit

24. No employee of the Bank is allowed to work as a contractor for a period of 2 years of his/her retirement from Bank/SBIIMS Services without previous permission of the Bank. This contract is liable to be cancelled, if either the contractor or any of his employees is any time to be such a person who had not obtained the permission of Bank as aforesaid before submission of the tender or engagement in the contractor's service.

25. Contractor should get approval of the samples of materials in advance with Bank Engineer before use of the same in the work'

26. Bank/SBIIMS has the right to offer the contractor to modify the old material wherever/ whenever necessary instead of new supplies

27. The quoted rate should be inclusive of materials, labour, wages, fixtures, transportation, installation, all taxes(excluding GST), wastages, Octroi, machinery, temporary works such as scaffolding, cleaning, overheads, profit, statutory expenses, incidental charges and all related expenses to complete the work

28. The tenders shall summarily rejected, if any one of the above said requirements has not been complied with.

29. The Bank will not be bound to accept the lowest tender and reserves the right to accept or reject any or all the tenders without assigning any reason whatsoever

30. The contractor should fulfill the labour regulation guidelines stipulated by the governments
31. No advance payment in any from will be granted for the works proposed
32. Period of taking up the final bill will be one month from/ after satisfactory virtual completion or the date of submission of the final bill whichever is later.

ASSISTANT GENERAL MANAGER

READ, UNDERSTOOD AND ACCEPTED

SIGNATURE OF THE CONTRACTOR WITH SEAL

DATE

Signature of contractor

FORM OF SUBMISSION OF TENDER
(To be filled by the tenderer)

The Assistant General Manager,
State Bank of India
RACPC-II,
D.No:58-146, Shantinagar
NAD Kotha Road, Visakhapatnam – 530 004

Dear Sir/s,

Ref: **INTERIOR WORKS AT NEW PREMISES OF RETAIL ASSET CREDIT PROCESSING CENTER-2 (RACPC II) , VISAKHAPATNAM , ANDHRA PRADESH**

I/We hereby declare that I/ We have carefully gone through the conditions laid down in the Notice Inviting Tender, General notes, General Conditions of Contract, Special conditions, Schedule of approximate quantities and rates, Form of Agreement, General Specification, Approved manufacturers/ natural source of materials Technical Specifications of schedule of quantities, and clearly understood all the same and on the basis of the same I/ We have quoted our rates in the Schedule of Quantities (i.e. BOQ) attached with the tender documents.

I / We do here by undertaken to execute and complete the whole or part of the work (as desired by you) at the respective rates quoted.

In the event of this Tender being accepted I/ We agree to enter into the agreement and submit the declaration on requisite non-judicial stamp papers as and when required and execute the contract according to your form of Agreement etc., in default whereof, I/ We do hereby bind my-self / ourselves to forfeit the aforesaid deposit.

In the event of this Tender being accepted I/ We agree to obtain the labor license and the CAR and Third party insurance policy and deposit the balance E.M.D. amount and adhere/comply to all other instructions as given in TENDER DOCUMENT.

I / We further agree to complete the work included in the said schedule of quantities within the time mentioned in the NIT from the date of the work order issued to commence the same.

Date of commencement shall be either one week from the date of work order issued to the contractor or the date on which mark out of work at site has been given to contractor; whichever is later.

I / We agree not to employ sub-contractors other than those that may be approved by Employer.

I / We agree to pay all taxes(except GST), insurance charges as prevailing from time to time, on such items for whom same is to be levied by/ for the government, and the rates quoted by me / us are inclusive of all the same.

Yours Faithfully,

Contractor's Signature_____

Name: _____

Address: _____

Signature of Witness:

1.

2.

3.

Signature of contractor

GENERAL NOTES

1. PROCEDURE OF FILLING AND SUBMISSION OF TENDER

i) Submission of BIDs/Tender Documents: Tenders should be submitted online in the website https://etender.sbi/ In addition, scanned copy of the declaration given in last page to be signed with seal and scanned proof of empanelment and its validity should be submitted online with our service provider on the website at: https://etender.sbi/ The tender document is not required to be sent to us in hard copy. The Tender documents with acceptance of all terms and conditions strictly as described in this tender document will be submitted online through M/s e-Procurement Technologies Ltd., Ahmadabad, the out sourcing agency approved by the Bank for e-tendering.

ii) In the event of the tender being submitted by a firm, it must be signed by a member or members of the firm having legal authority to do so, and if called for, the legal documents in support thereof must be produced for inspection and the same in the case of the firm carried out by one member of a joint family. It must disclose that the firm is duly registered under the India Partnership Act. Any tender signed by a member not holding a power of attorney shall be treated as informal.

Tenderer shall note that their tenders shall remain open for acceptance for a minimum period of three months from the last date of receipt of tenders. The tenders must be unconditional. Conditional tenders will be summarily rejected.

2. RATES :

RATES MENTIONED ARE INCLUSIVE OF .

a) Materials, labour, wastages, overhead, transport, seigniorage charges etc all for completing work
b) Necessary cost of taking samples of materials supplied by them for work including plywood, wood/tiles etc., testing of the same at Govt.'s / approved laboratory including transportation, cost of the samples, as and when required.
c) Submission of test reports of other materials as may be specified by Bank's Engineer.

3. STORAGE OF MATERIALS:

The contractor shall not store their materials and debris within the premises other than the work site handed over to him.

5. LABOUR HUTMENT:

Shelter or stay and other amenities for the labors have to be arranged by the contractor at his own expense and responsibility.

6. IDLE LABOUR:

In case the work is held up for any site conditions not attributable to the contractors or for any decisions instructions / want of details from Employer or for any of the conditions, the contractor shall be allowed reasonable extension of time by the employer but any claim for idle labour shall not be entertained by the employer. Contractor's quoted rates should include for all such contingencies.

7. The contractor shall engage one competent person at site who shall take the instructions from the Employer. The work should not suffer due to lack of supervision, manpower and materials.

8. The Contractor is required to co-ordinate his works along with other agencies working at site. He has to reimburse any of the damage made by him or any of his representatives for any of the other agency or owner at site.

Signature of contractor

9. Making of any cut-out / opening for electrical wiring / fitting in any of false ceiling, partition, Paneling, masonry work etc., and providing panels of the same finish in partitions, paneling shall not be paid extra.

10. The contractor is required to fabricate a sample where required, or any item so installed for approval. Any changes made by the Architect/Employer, in the sample to the specifications as mentioned in the tender, shall not be deducted or paid extra. The bulk production of the furniture can only be taken up after the final approval of the sample of the item.

11. The partitions shall be so fixed that all joinery work is in plumb and true in line. The partition frame shall be firmly fixed to the floor and ceiling by using suitable wall plugs and screws.

12. The contractor shall check all dimensions before fabricating and fixing the partitions or any other items in position at site.

13. All measurements given in the schedule hereunder are for the purpose of tender only. Payment will be made on actual measurement of the work done.

14. All measurements shall be as per relevant I.S. standards.

Signature of contractor

GENERAL CONDITIONS OF CONTRACT

Except where provided for in the description of the individual items in the schedule of quantities and in the specifications and conditions laid down hereinafter and in the drawings, the work shall be carried out as per standard specifications and under the direction of Employer.

1. INTERPRETATION

In constructing these conditions, the specifications, the schedule of quantities, tender and agreement, the following words shall have the meaning herein assigned to them except where the subject or context otherwise requires.

i. **Employer**: The term employer means **State Bank of India having office at** at Gunfoundry, Hyderabad and any of its employees representative authorized on their behalf.

ii. **Architects / Consultants:** The term Architects shall mean the Architects appointed by the employer for the purpose of preparing detailed drawing, supervision etc. M/s design Discovery, Visakhapatnam are appointed as consulting Architects for the Project. It is the Bank to decide whether to appoint Architect or not and to change the Architect at any stage of work.

iii. **Contractor:** The term contractor shall mean _____ (Name and address of the contractor) and his / their heirs, legal representives, assigns &successors.

iv. Site: The site shall mean the site where the works are to be executed including any building and erection thereon, allotted by the employer for the contractors use.

v. Site Engineer: Any Engineer appointed from time to time by the Employer and certified in writing to the Architects and the Contractor, to be positioned at site to supervise the work.

vi. Drawings: The work is to be carried out in accordance with drawings, specifications, the schedule of quantities and any further drawings which may be supplied or any other instruction, which may be given by the Employer or Architects during the execution of the work.

All drawings relating to work given to the contractor together with a copy of schedule of quantities are to be kept at site and the Employer / Architects shall be given access to such drawings or schedule of quantities wherever necessary.

In case any detailed Drawings are necessary contractor shall prepare such detailed drawings and / or dimensional sketches therefore and have it confirmed by the Employer as case may be prior to taking up such work.

The contractor shall ask in writing for all clarifications on matters occurring anywhere in drawings, specifications and schedule of quantities or to additional instructions at least 10 days ahead from the time when it is required for implementation so that the Employer may be able to give decision thereon.

vii. **"The Works"** shall mean the work or works to be executed or done under this contract.

viii. **"Act of Insolvency"** shall mean any act as such as defined by the Presidency Towns Insolvency Act or in Provincial Insolvency act or any amending status.

ix. **"The Schedule of Quantities"** shall mean the schedule of quantities as specified and forming part of this contract.

x. "**Priced Schedule of Quantities"** shall mean the schedule of quantities duly priced with the accepted quoted rates of the contractor.

Signature of contractor

xi. "**Contract"** shall mean the Articles of Agreement, the general conditions special conditions, the appendix, the schedule of quantities, specifications and drawings attached here to and duly signed.

xii. '**Contract Price'** shall mean the sum named in the Tender subject to such additions thereto or deductions there from as may be made under the provisions hereafter contained.

xiii. **'Notice in Writing'** or written notice shall mean a notice in writing, type or printed characters sent (unless delivered personally or otherwise provided to have been received) by registered post to the last known private or business address or registered office of the addressee and shall be deemed to have been received when in the ordinary course of post it would have been delivered.

xiv. 'Virtual Completion' shall mean the premise is in the opinion of the Employer fit for occupation.

xv. Words importing persons include firms and corporations. Words importing the singular only, also include the plural and vice verse where the Context requires.

2. SCOPE OF WORK/ CONTRACT

The Brief Scope of work involves the following.

1. False Ceeiling
2. Various furniture work consists of counters, Work stations, partitions, storage etc.
3. Painting
4. GLASS WORK, PANELLING ETC

The Contractor shall carry out and complete the said work in every respect in accordance with this Contract and with the directions of and to the satisfaction of the Employer. The Architect with approval of Employer or Employer issue further drawings and/or written instructions, detailed directions and explanations which hereafter collectively referred to as 'Instructions' in regard to:

a) The variation or modification of the design quality or quantity of works or the addition or omission or substitution of any work.
b) Any discrepancy in the drawings or between the schedule of quantities and / or drawings and / or specification.
c) The removal from the site of any defective material brought thereon by the contractor and the substitution of any other material thereof.
d) The demolition removal and / or re-execution of any work executed by the contractor/s.
e) The dismissal from the work of any persons employed there upon.
f) The opening up for inspection of any work covered up.
g) The rectification and making good of any defects under clauses hereinafter mentioned and those arising during the maintenance period (Defect Liability Period).

The contractor shall forthwith comply with and duly execute any work comprised in such Employer's or his agent / Architect's instructions, provided always that verbal instructions, directions and explanations given to the contractor's or his representative upon the works by the Employer's or his agent / Architects shall, if involving a variation, be confirmed in writing to the contractor/s within seven days. No works, for which rates are not specifically mentioned in the priced schedule of quantities, shall be taken up without written permission of the Employer. The employer as provided in clause "variation" shall fix rates of items not mentioned in the priced schedule of quantities.

Regarding all factory made products for which ISI marked products are available, only products bearing ISI marking shall be used in the work.

3. TENDERER SHALL VISIT THE SITE

Intending tenderer shall visit the site and make himself thoroughly acquainted with the local site condition, nature and requirements of the works, facilities of transport conditions, effective labour and materials, access and storage for materials and removal of rubbish. The tenderer shall provide in their tender for cost of carriage, freight and other charges as also for any special difficulties and including police restriction for transport etc., for

Signature of contractor

proper execution of work as indicated in the drawings. The successful tenderer will not be entitled to any claim of compensation for difficulties faced or losses incurred on account of any site condition.

4. TENDERS

The Employer reserves the right to reject the lowest or any tender and also to discharge any or all of the tenders of each section or to split up and distribute any item of work to any specialist firm or firms, without assigning reasons.

The tenderers should note that the tender is strictly on the item rate basis and their attention is drawn to the fact that the rates for each and every item should be correct, workable and self-supporting. If called upon by the Employer/Architects detailed analysis of any or all the rates shall be submitted. The Employer/Architects shall not be bound to recognize the contractor's analysis.

The works will be paid for as "measured work" on the basis of actual work done and not as "lump sum" contract, unless otherwise specified.
All items of work described in the schedule of quantities are to be deemed and paid as complete works in all respects and details including preparatory and finishing works involved, directly related to and reasonably detectable from the drawings, specifications and schedule of quantities and no further extra charges will be allowed in this connection. In the case of lump-sum charges in the tender in respect of any items of work will be made for the actual work done on the basis of lump sum charges as will be assessed to be payable by the Employer / Architects.

The employer has power to add, omit from any work as shown in drawings or described in specifications or include in schedule of quantities and intimate the same in writing but no addition, omission or variation shall be made by the contractor without authorization from the Employer. No variation shall vitiate the contract.

The tenderer shall note that his tender shall remain open for consideration for a period of three months from the date of opening of the tender.

5. AGREEMENT
The successful contractor will be required to sign agreement in accordance with the draft agreement enclosed and the schedule conditions. The contractor shall pay for all stamps and legal expenses, incidental thereto. However the written acceptance by the employer of a tender will constitute a binding contract between the employer and the person so tendering such formal agreement is subsequently executed.

6. AUTHORITIES, NOTICES, PATENT RIGHTS AND ROYALTIES:

The contractor shall conform to the provisions of any Acts of the Legislature relating to the work, and to the Regulations and Bye-Laws of any authorities, and / or any water, lighting and other companies, and / or authorities with whose systems the structures were proposed to have connection and shall before making any variations from the drawings or specifications that may be associated to so conform, give the Employer / Architects written notices specifying the variations proposed to be made and reasons for making them and apply for instruction thereon. The Employer / Architects on receipt of such intimation shall give a decision within a reasonable time.

The contractor/s shall arrange to give all notices required for by the said Acts, Regulations or Bye-laws to be given to any authority, and to pay to such authority or to any public officer all fees that may be properly chargeable in respect of the work and lodge the receipts with the Employer

The Contractor shall identify the Employer against all claims in respect of patent rights, designs, trademarks or name or the protected rights in respect of any constructional plant, machine, work or material used for or in connection with the works or temporary works and from and against all claims, demands, proceedings, damages, costs, charges, and expenses whatsoever in respect thereof or in relation thereto. The Contractor shall defend all actions arising from such claims, unless he has informed the Architects, before any such infringement and received their permission to proceed and shall himself pay all royalties, license fees, damages,

Signature of contractor

coat and charges of all and every sort that may be legally incurred in respect thereof.

8. NOTICES AND STATUTORY REGULATIONS:

The contractor shall give all notices and pay all fees and shall comply all Acts and Regulations for the successful completion of the contract works.

The whole of the work is to be complied with as per the requirements and bylaws of the relevant statutory authorities including contract labor (Regulation and Abolition) Act 1970.

9. QUANTITY OF WORK TO BE EXECUTED

The Schedule of Quantities unless otherwise stated shall be deemed to have been prepared in accordance with the Standard Procedure shall be considered to be approximate and no liability shall attach to the employer for any error may be discovered therein. The Employer reserves the right to execute only a part or the whole or any excess thereof without assigning any reason therefore.

The Contractor shall be deemed to have satisfied himself before tendering to the correctness and sufficiency of his tender for the works and of the prices stated in the Schedule of Quantities and / or the Schedule of Rates and Prices, which rates and prices shall cover all things necessary for the completion of the works.

10. OTHER PERSONS ENGAGED BY THE EMPLOYER

The Employer reserves the right to execute any part of the work included in this contract or any work, which is not included in this contract by the other Agency, or persons and contractor shall allow all reasonable facilities and use of his scaffoldings for the execution of such work. The main contractor shall extend all cooperation in his regard.

11. Tenderer should deposit EMD as mentioned in the NIT.

12. CONTRACTOR TO PROVIDE EVERYTHING NECESSARY

The Contractor shall provide everything necessary for the proper execution of the work according to the intent and meaning of the drawings, schedule of quantities and specifications taken together whether the same may or may not be particularly shown or described therein provide that the same can reasonably be inferred there from and if the contractor finds any discrepancies therein he shall immediately and in writing , refer the same to the Employer / Architects whose decision shall be final and binding.

13. TIME OF COMPLETION, EXTENSION OFTIME&PROGRESS CHART

The Contractor shall be allowed admittance to the site on the 'Date of Commencement' stated in the Appendix, and he shall thereupon and forthwith begin the works and shall regularly proceed with to complete the same. On or before the 'Day of Completion' stated in the Appendix subject nevertheless the provision for the extension of time hereinafter contained.

If in the opinion of the Employer/Architect the works be delayed:

a) By force major or
b) By reason of any exceptionally inclement weather or
c) By reason of proceedings taken or threatened by or dispute with adjoining or neighboring owners of public authorities arising, than through the Contractor's won default or
d) By the works or delays of the contractors tradesmen engaged or nominated by the Employer / Architect and not referred in the Schedule of Quantities and / or specifications or
e) By reason of civil, commotion, local combination of workmen or strike or lock-out effecting any of the buildings traders or

Signature of contractor

f) In consequence of the Contractor not having in due time, necessary instructions from the Employer for which he shall have specifically applied in writing ahead of time, giving reasonable time to prepare such instructions, the employer shall make a fair and reasonable extension of time for completion of the Contract works
In case of such strike or lock-out, the Contractor shall as soon as possible give written notice thereof to the employer, but the Contractor shall nevertheless constantly use his endeavors to prevent delay and shall do all they may reasonably be required, to the satisfaction of the employer to proceed with the work.

The Contractor on starting the works shall furnish to the Employer / Architect a PERT / CPM Program for carrying out the work stage in the stipulated time for the approval of Architect / Employer and follow strictly the approved time schedule incorporating charges if any, to ensure the completion of the work in stipulated time. A graph or chart on individual work shall be maintained showing the proportionate progress of work week by week a weekly progress report stating the number of skilled and un skilled laborers employed on the work, working hours done, place, type, and quantity of work done during the period.

The Contractor must inform the employer within 10 days in advance of all drawings and detailed required by him from time to time. The Contractor shall adhere to the approved program and arrange for the materials and labour etc accordingly.

Despite repeated instructions, if the Contractor fails to show proportionate progress of the work, the Architect / Employer may take suitable action and deemed fit without prejudice to any terms and conditions of the contract

14. LIQUIDATED DAMAGES

Should the work be not completed to the satisfaction of the Employer /Architects within the stipulated period, the contractor shall be bound to pay to the Employer a sum calculated as given below by way of liquidated damages and not as penalty during which the work remains un-commenced or unfinished after the expiry of the completion date.

If the contractor fails to complete the work by the Scheduled date of completion or within any sanctioned extended time, he will have to pay liquidated damages at 0.5% of contract amount for each week beyond the date that the work remains incomplete subject to maximum of 5%of the contract value (without extra items).

15. MATERIALS, WORKMANSHIP, SAMPLES, TESTING OF MATERIALS.

All the works specified and provided for in the specifications or which may be required to be done in order to perform and complete any part thereof shall be executed in the best and most workmanlike manner with materials of the best and approved quality of the respective kinds in accordance with the particulars contained in and implied by the specifications and as represented by the drawings or according to such other additional particulars, and instructions as may from time to time be given by the Employer / Architects during the execution of the work and to his entire satisfaction.

All mandatory tests shall be carried out as per CPWD specifications. If required by the Employer / Architects, the contractor shall have to carry out tests on materials and workmanship in approved materials testing laboratories or as prescribed by the Employer / Architects at his own cost to prove that the materials etc., under test conform to the relevant I.S Standards or as specified in the specifications. The necessary charges, transporting, testing etc., shall have to be borne by the contractor. No extra payment on this account should in any case be entertained.
All the materials (except where otherwise described) stores and equipment required for the full performance of the work under the contract must be provided through normal channels and must include charges for import duties, and other charges and must be the best of their kind available and the contractors must be entirely responsible for the proper and efficient carrying out of the work. The work must be done in the best workmanlike manner. **Samples of all materials to be used must be submitted to the Employer when so directed by the Engineer and written approval from Employer must be obtain prior to placement of order.**

Any damage (during the work) to any part of the work or to the premises for any reasons due to rain, storm or

Signature of contractor

neglect of contractor shall be rectified by the contractor in an approved manner at no extra cost.

Should the work be suspended by reason of rain, strike, lock-outs or any other cause, the contractor shall take all precautions necessary for the protection of work and at his own expenses shall make good any damage arising from any of these causes.

The contractor shall cover up and protect from damage, from any cause, all new work and supply all temporary doors, protection to windows, and any other requisite protection for the execution of the work whether by himself or special tradesmen or sub-contractor and any damage caused must be made good by the contractor at his own expenses.

Contractor should take all precaution to safeguard the flooring and if any damages to the flooring should be rectified by the contractor in the same quality at his own cost.

16. REMOVAL OF IMPROPER WORK

The Employer shall during the progress of the work have power to order in writing from time to time the removal from the work within such reasonable time or times as may be specified in the order of any materials which in the opinion of the Employer / Architects are not in accordance with specification or instructions, the substitution or proper re-execution of any work executed with materials or workmanship not in accordance with the drawings and specifications or instructions. In case the contractor refuses to comply with the order the Employer shall have the power to employ and pay other agencies to carry out the work and all expenses consequent thereon or incidental thereto as certified by the Employer / Architects shall be borne by the contractor or may be deducted from any money due to or that may become due to the contractor. No certificate, shall relieve the contractor from his liability in respect of unsound work or bad materials.

17. SITE ENGINEER

The Employer may appoint a Site Engineer or clerk of works who shall be representative of the Employer. The duties of the Employer representative are to watch and supervise the works and to test any materials to be used of workmanship employed in connection with the works. He shall have no authority either to relieve the Contractor of any of his duties or obligations under the Contract, or except those expressly provided hereunder, to order any work involving delay or any extra payment by the Employer or any variation of or in the works.

The contractor shall afford the Employer's representative every facility and assistance for examining the works and materials and checking the measuring time and materials. Neither the Employer's representative nor any assistant to the Architect shall have power to revoke, alter enlarge or relax the requirements of this Contract, or to Sanction any day-work, additions, alterations, deviations or omissions unless such an authority may be specially conferred by a written order of the Employer.

The Employer's Representative shall have to give notice to the Contractor or his foremen about the non-approval of any work or materials and such works shall be suspended or the use of such material should be discontinued until the decision of the employer/Architect is obtained, the work will from time to time be examined by the Architect or the Employer's representative but such examinations shall not in any way exonerate the Contractor from the obligation to remedy defects which may be found to exist at any stage of the work of after the same is completed. Subject to the limitations of this cause, the Contractor shall take instruction from the Architect / Employer.

28. CONTRACTOR'S EMPLOYEES

The Contractor shall employ technically qualified and competent supervisors for the work who shall be available (by turn) throughout the working hours to receive and comply with instructions of the Employer / Architects. The contractor shall engage at least one experienced Engineer as site-in-charge for execution of the work. The contractor shall employ in connection with the work persons having the appropriate skill or ability to perform their job efficiently.

The contractor shall not employ labour below the age of sixteen years and who is not an Indian National.

Any laborer supplied by the contractor to be engaged on the work on day work basis either wholly or partly under the direct order or control of the Employer or his representative shall be deemed to be a person employed by the contractor.

LOCAL LAWS, ACTS, REGULATIONS

The contractor should abide by the central labour regulation and also shall strictly adhere to all prevailing labour laws inclusive of contract labour (Regulation and abolition act of 1970) and other safety regulations. The agency shall comply with the provision of all labour legislation including the latest requirements of all the acts, laws, any other regulations that are applicable to the execution of the tests.

a) Minimum wages act, 1948 (Amended)
b) Payment of wages act,1936 (Amended)
c) Workmen's compensation act 1923 (Amended)
d) Contract labour Regulation and Abolition act 1970 and Central rules 1971 (Amended)
e) Chief Labour Commissioner(C) , Ministry of Labour&Employment vide Gazette notification No.F.No.1/13(3)/2017-LS-II dated 20th April 2017 on minimum wages
f) Apprentice act 1961 (Amended)
g) Industrial employment (Standing order) Act 1946 (Amended)
h) Personal injuries (compensation insurance) Act 1963 and other modifications
i) Employees' Provident Fund and Miscellaneous Provisions Act 1952 and amendment thereof
j) Shop and Establishment Act
k) Employer's Liability Act.
l) Any other Act or enactment thereof and rules framed there under from time to time.

The contractor shall keep the Employer saved harmless an indemnified against claims if any of the workmen and all costs and expenses as may be incurred by the Employer in connection with any claim that may be made by any workmen.

The contractor shall comply at his own cost with the order for requirement of any Health Officer of the State or any local authority or of the Employer regarding the maintenance of proper environmental sanitation of the area where the contractor's laborers are housed or accommodated, for the prevention of small pox, cholera, plague, typhoid, malaria and other contagious diseases. The contractor shall provide, maintain and keep in good sanitary condition adequate sanitary accommodation and provide facilities for pure drinking water at all times for the use of men engaged on the works and shall remove and clear away the same on completion of the works. Adequate precautions shall be taken by the contractor to prevent nuisance of any kind on the works or the lands adjoining the same.

The contractor shall arrange to provide first aid treatment to the laborers engaged on the works. He shall within 24 hours of the occurrence of any accident at or about the site or in connection with execution of the works report such accident to the Employer and also to the competent Authority where such report is required by law.

19. DISMISSAL OF WORKMEN

The contractor shall on the request of the Employer immediately dismiss from works any person employed thereon by him, who in the opinion of the Employer be unsuitable or incompetent or who may misconduct him. Such discharges shall not be the basis of any claim for compensation or damages against the Employer or any of their officer or employee.

20. ASSIGNMENT

The whole of the works included in the contract shall be executed by the contractor and the contractor shall not directly or indirectly transfer, assign or underlet the contract or any part, share or interest therein nor, shall take a new partner, without written consent of the Employer and no subletting shall relieve the contractor from the full

Signature of contractor

and entire responsibility of the contract or from active superintendence of the work during their progress.

21. INSURANCE & DAMAGE TO PERSONS AND PROPERTY ETC.

The contractors under the terms of the contract are required to keep the works duly insured under CAR Policy(Contractor All Risk Policy) as well as third Party Insurance for the value of 110% of the Project value or Tender value until the Completion of the project or handing over whichever is later. The insurance policies should be taken in the joint names by the contractors and the same should be renewed at appropriate time.

The contractor shall be responsible for all injury to the work or workmen to persons, animals or things and for all damages to the structural and / or decorative part of property which may arise from the operations or neglect of himself or of any sub-contractor or of any of his or a sub-contractor's employees, whether such injury or damage arise from carelessness, accident or any other cause whatsoever in any way connected with the carrying out of this contract. The clause shall be held to include inter-alias, any damage to buildings whether immediately adjacent or otherwise, and any damage to roads, streets, foot paths or ways as well as damages caused to the buildings and the works forming the subject of this contract by rain, wind or other inclemency of the weather. The contractor shall indemnify the Employer and hold harmless in respect of all and any expenses arising from any such injury or damages to the person or property as aforesaid and also in respect of any claim made in respect of injury of damage under any acts on compensation or damage consequent upon such claim.

The contractor shall reinstate all damages of every sort mentioned in this clause so as to deliver the whole of the contract works complete and perfect in every respect and so as to make good or otherwise satisfy all claims for damages to the property of third parties.

The contractor shall affect the insurance necessary and indemnify the Employer entirely from all responsibility in this respect. must be effected jointly in the name of the Employer and contractor and the policy lodged with the Employer. The scope of insurance is to include damage or loss to the contract itself till this is made over in a complete state. Insurance is compulsory and must be affected from the very initial stage. The contractor shall also be responsible for anything, which may be excluded from damage to any property arising out of incidents, negligence or defective carrying out of this contract.

The Employer shall be at liberty and is hereby empowered to deduct the amount of any damages, compensations, costs, charges and expenses arising or accruing from or in respect of any such claim or damages from any sums due to or to become due to the contractor.

22. MEASUREMENTS

Before taking any measurement of any work the Site Engineer or employer's representative shall give reasonable notice to the contractor. If the contractor fails to attend at the measurements after such notice or fails to countersign or to record the difference within a week from the date of measurement in the manner required by Site Engineer or by the subordinate deputed by him as the case may be is final and binding on the contractor and contractor shall have no right to dispute the same.

The Employer / Architect shall issue a certificate after due scrutiny of the contractor's bill stating the amount due to the contractor from the Employer and the contractor shall be entitled to payment thereof, within the period of honoring certificates named in these documents.

23. PAYMENTS

All bills shall be prepared by the contractor in the form prescribed by the Employer's / Architects. Normally one interim bill shall be prepared each month subject to minimum value as stated in these documents. The bills in proper forms must be duly accompanied by detailed measurements in M-book in support of the qualities of work done and must show deductions for all previous payments, retention money, etc.

The Architect shall issue a certificate after due scrutiny of the contractor's bill stating the amount due to the contractor from the Employer and the contractor shall be entitled to payment thereof, within the period of honoring certificates named in these documents.

The Employer will deduct IT, other applicable taxes if any (but GST is reimbursable) and retention money as described in this document. The refund of retention money will be made as specified.

If the Employer has supplied any materials or goods to the contractor, the cost of any such materials or goods will be progressively deducted from the amount due to the contractor in accordance with the quantities consumed in the work.

All the interim payments shall be regarded as payments by way of advance against the final payment only and not as payments for work actually done and completed, and shall not preclude the requiring of bad, unsound, and imperfect or unskilled work to be removal and taken away and reconstructed, or re-erected or be considered as an admission of the due performance of the contract, or any part thereof in any respect or the accruing of any claim, nor shall, it conclude, determine or affect in any way the power of the Employer under these conditions or any of them as to the final settlement and adjustment of the accounts or otherwise or in any other way vary or affect the contract. The final bill shall be submitted by the contractor within one week of the date fixed for completion of the work or of the date of certificate of completion and payment shall be made within one month from the date of receipt of the bill.

Final Payment

The final bill shall be accompanied by a certificate of completion from the Architects. Payments of final bill shall be made after deduction of Retention Money as specified, which shall be refunded after the completion of the Defects Liability Period after receiving the Branch Manager/Engineer's certificate that the contractor has rectified all defects to the satisfaction of the Employer. The acceptance of the payment of the final bill by the contractor would indicate that he has no further claim in respect of the work executed.

24. VARIATION / DEVIATION

The tender rates shall be fixed and applicable for any increase or decrease in the tendered quantities. The Employer / Architect can increase or decrease any quantities to any extend or even delete particular item as per the site requirements and the contractor shall not be paid anything extra on this account. Nothing extra will be paid by the Bank on account of omission / deletion of items or decrease in the quantity of items. The Bank shall not entertain any claim whatsoever from the contractor on this account.

The price of all additional items/non-tendered items will be worked out on the basis of rates quoted for similar items in the contract wherever existing. If similar items are not available, the rates for such items will be derived as per standard method of rate analysis based on prevalent fair price of labour, material and other components as required with 15% towards contractor's profit and overheads.

25. SUBSTITUTION

Should be contractor desire to substitute any materials and workmanship, he/they must obtain the approval of the Employer/ Architects in writing for any such substitution well in advance. Materials designated in this specification indefinitely by such term as "Equal" or "Other approved" etc. specific approval of the Employer / Architect has to be obtained in writing.

26. CLEARING SITE ON COMPLETION

On completion of the works the contractor shall clear away and remove from the site all machinery, surplus materials, rubbish and temporary works of every kind and leave the whole of the site and the works clean and in a workmanlike condition to the satisfaction of the Employer/Architects.

27. DEFECTS AFTER COMPLETION

The contractor shall make good at his own cost and to the satisfaction of the Employer all defects, peeling off laminate, false ceiling cracks, or any other faults, which may appear within 12 months after completion of the work. In the default, the Employer may employ and pay other persons to amend and make good such damages, losses and expenses consequent thereon or incidental thereto shall be made good and borne by the contractor and such damages, loss and expenses shall be recoverable from him by the Employer or may be deducted by the employer, in lieu of such amending and making good by the contractor, deduct from any money due to the contractor a sum equivalent to the cost of amending such work and in the event of the amount retained being insufficient recover that balance from the contractor from the amount retained(retention money) together with any expenses the Employer may have incurred in connection therewith.

28. CONCEALED WORK

The contractor shall give due notice to the Employer/Architects whenever any work is to be covered up or finished up or otherwise becoming inaccessible later on, in order that the work may be inspected and correct dimensions taken before such covering, in default whereof the same shall, at the opinion of the Employer/ Architect be either opened up for measurement at the contractor's expenses or no payment may be made for such materials. Should any dispute or differences arise after the execution of any work as to measurements etc., or other matters which cannot be conveniently tested or checked, the notes of the Employer / Architects shall be accepted as correct and binding on the contractor.

29. IDLE LABOUR

Whatever the reasons may be, no claim for idle labor, additional establishment cost of hire and labor charges of tools and plants would be entertained under any circumstances.

30. SUSPENSION OF WORKS

If the contractor except on account of any legal restraint upon the Employer preventing the continuance of the work or in the opinion of the Employer shall neglect or fail to proceed with due diligence in the performance of his part of the contract or if he shall more than once make default, the Employer shall have the power to give notice in writing to the contractor requiring the work to be proceeded within a reasonable manner and with reasonable dispatch, such notice purport to be a notice under this clause.

After such notice shall have been given, the contractor shall not be at liberty to remove from the site of the works or from any ground contiguous thereto any plant or materials to subsist from the date of such notice being given until the notice shall have been compiled with. If the contractor fails to start the work within seven days after such notice has been given to proceed with the works as therein prescribed, the employer may proceed as provided in clause 31 (Termination of Contract by Employer)

31. TERMINATION OF CONTRACT BY EMPLOYER

If the contractor being a company go into liquidation whether voluntary or compulsory or being a firm shall be dissolved or being an individual shall be adjudicated insolvent or shall make an assignment or a composition for the benefit of the greater part, in number of amount of his creditors or shall enter into a Deed or arrangement with his creditors, or if the Official Assignee in insolvency, or the Receiver of the contractor in insolvency, shall repudiate the contract, or if a receiver of the contractor's firm appointed by the court shall be unable within fourteen days after notice to him requiring him to do so, to show to the reasonable satisfaction of the employer that he is able to carry out and fulfill the contract, and if so required by the employer to give reasonable security therefore, or if the contractor shall suffer execution to be issued, or shall suffer any payment under this contract to be attached by or on behalf of and of the creditors of the contractor, or shall assign, charge or encumber this contract or any payments due or which may become due to contractor, there under, or shall neglect or fail to observe and perform all or any of the acts matters of things by this contract, to be observed and performed by the contractor within three clear days after the notice shall have been given to the contractor in manner hereinafter mentioned requiring the contractor to observe or perform the same or shall use improper materials of

workmanship in carrying on the works, or shall in the opinion of the employer not exercise such due diligence and make such progress as would enable the work to be completed within due time agreed upon, and shall fail to proceed to the satisfaction of the employer after three clear das notice requiring the contractor so to do shall have been given to the contractor as hereinafter mentioned or shall abandon the contract, then and in any of the said cases, the Bank may notwithstanding previous waiver determine the contract by a notice in writing to the effect as hereinafter mentioned, but without thereby effecting the powers of the employer of the obligations and liabilities of the contractor the whole of which shall continue in force as fully as if the contract, had not been so determine and as if the works subsequently executed by or on behalf of the contractor (without thereby creating any trust in favor of the contractor) further the employer or his agent, or servants, may enter upon and take possession of the work and all plants tools scaffolding sheds machinery, steam, and other power, utensils and materials lying upon premises or the adjoining lands or roads and sell the same as his own property or may employ the same by means of his own servants and workmen in carrying on and completing the works or by employing any other contractors or other persons or person to complete the works, and the contractor shall not in any way interrupt or do any act, matter or thing to prevent or hinder such other contractors or other persons or person employed from completing and finishing or using the materials and plants for the works when the works shall be completed, or as soon thereafter as conveniently may be the employer shall give notice in writing to the contractor to remove his surplus materials and plants and should the contractor to remove his surplus materials after receipt by him the employer may sell the same by Public Auction and shall give credit to the contractor for the amount so realized. Any expenses or losses incurred by the contractor for the amount so realized. Any expenses or losses incurred by the employer in getting the amount payable to the contractor by way of selling his tools and plants or due on account of work carried out by the contractor prior to engaging other contractors or against the Security Deposit.

32. ARBITRATION

Except where otherwise provided in the contract all questions and disputes relating to the meaning of the specifications, design, drawings and instructions herein before mentioned and as to the quality of workmanship or materials used on the work or as to any other question, claim, right, matter or thing whatsoever in any way arising out of or relating to the contract, designs, drawings, specifications, estimates, instructions, orders or these conditions or otherwise concerning the work or the execution or failure to execute the same, whether arising during the progress of the work or after the cancellation, termination, completion or abandonment thereof shall be dealt with as mentioned hereinafter :

i)If the contractor considers that he is entitled to any extra payment or compensation in respect of the works over and above the amounts admitted as payable by the Architect or in case the contractor wants to dispute the validity of any deductions or recoveries made or proposed to be made from the contract or raise any dispute, the Contractor shall forthwith give notice in writing of his claim, or dispute to the Assistant General Manager (Premises& Estate)/Dy.General Manager (Premises)and endorse a copy of the same to the Architect, within 30 days from the date of disallowance thereof or the date of deduction or recovery. The said notice shall give full particulars of the claim, grounds on which it is based and detailed calculations of the amount claimed and the contractor shall not be entitled to raise any claim nor shall the Bank be in any way liable in respect of any claim by the contractor unless notice of such claim shall have been given by the contractor to the Assistant General Manager (Premises& Estate)/Dy.General Manager (premises) in the manner and within the time as aforesaid. The contractor shall be deemed to have waived and extinguished all his rights in respect of any claim not notified to the Assistant General Manager (Premises& Estate)/Dy.General Manager (premises) in writing in the manner and within the time aforesaid.

ii)The Assistant General Manager (Premises& Estate)/Dy.General Manager (premises) shall give his decision in writing on the claims notified by the contractor. The contractor may within 30 days of the receipt of the decision of the Assistant General Manager (Premises& Estate)/Dy.General Manager (premises) submit his claims to the conciliating authority namely the Circle Development Officer/General Manager (Corporate Services) for conciliation along with all details and copies of correspondence exchanged between him and the Assistant General Manager (Premises& Estate)/Dy.General Manager (premises)

iii)If the conciliation proceedings are terminated without settlement of the disputes, the contractor shall, within a period of 30 days of termination thereof shall give a notice to the concerned Chief General

Signature of contractor

Manager/Dy.Managing Director &Corporate Development Officer of the Bank for appointment of an arbitrator to adjudicate the notified claims failing which the claims of the contractor shall be deemed to have been considered absolutely barred and waived.

iv)Except where the decision has become final, binding and conclusive in terms of the contract, all disputes or differences arising out of the notified claims of the contractor as aforesaid and all claims of the Bank shall be referred for adjudication through arbitration by the Sole Arbitrator appointed by the Chief General Manager/Dy.Managing Director&Corporate Development Officer. It will also be no objection to any such appointment that the Arbitrator so appointed is a Bank Officer and that he had to deal with the matters to which the Contract relates in the course of his duties as Bank Officer. If the arbitrator so appointed is unable or unwilling to act or resigns his appointment or vacates his office due to any reason whatsoever another sole arbitrator shall be appointed in the manner aforesaid by the said Chief General Manager/Dy.Managing Director &Corporate Development Officer. Such person shall be entitled to proceed with the reference from the stage at which it was left by his predecessor.

It is a term of this contract that the party invoking arbitration shall give a list of disputes with amounts claimed in respect of each dispute along with the notice for appointment of arbitrator.

It is also a term of this contract that no person other than a person appointed by such Chief General Manager aforesaid should act as arbitrator.

The conciliation and arbitration shall be conducted in accordance with the provisions of the Arbitration & Conciliation Act 1996 or any statutory modification or re-enactment thereof and the rules made there under.
It is also a term of the contract that if any fees are payable to the arbitrator these shall be paid equally by both the parties. However, no fees will be payable to the arbitrator if he is a Bank Officer.

It is also a term of the contract that the arbitrator shall be deemed to have entered on the reference on the date he issues notice to both the parties calling them to submit their statement of claims and counter statement of claims. The venue of the arbitration shall be such place as may be fixed by the arbitrator in his sole discretion. The fees if any, of the arbitrator shall, if required to be paid before the award is made and published, be paid half and half by each of the parties. The cost of the reference and of the award (including the fees, if any of the arbitrator) shall be in the discretion of the arbitrator who may direct to any by whom and in what manner, such costs or any part thereof shall be paid and fix or settle the amount of costs to be so paid.

Signature of contractor

SPECIAL CONDITIONS OF CONTRACT

1. DRAWINGS AND SPECIFICATIONS

The works shall be carried out to the entire satisfaction of the EMPLOYER and the Architect, in accordance with the signed drawings and specifications and such further drawings and details as may be provided by the Architect/Employer, and in accordance with such written instructions, directions and explanations as may from time to be given by the Employer/Architect, whose decision as to the sufficiency and quality of the work and materials shall be final and binding upon all parties. If the work shown on any such further drawings or work that may be necessary to comply with any such instructions directions or explanations, be in the opinion of the contractor extraction that comprised in or reasonably to be inferred from the contract he shall before proceedings with such work, give notice in writing to this effect to employer/Architect, and in the event of the employer/Architects agree to the same in writing the contractor shall be entitled to an allowance in respect of such extra work as on authorized extra. If the Architect and the contractor fail to agree as to whether or to there is an extra, then, if the Architect decided that the contractor is to carry out the said work, the contractor shall do so, and the question whether or not there is any extra, and it so the amount thereof, shall failing agreement, be settled by Arbitration as hereinafter provided, but such references shall in no way delay the fulfillment of this contract.

No drawings shall be taken as in itself on order for variation unless, in addition to the employer/Architect's signature, it bears express words stating that is intended to be such an order or bears a remark '**VALID FOR EXECUTION'.** No claim for payment for extra work shall be allowed unless the said work shall have been executed under the provisions of clause 6 (Authorities notices, patent right and royalties) or by the Authorities of directions in drawing of the Architect as herein mentioned.

One complete set of the signed drawings and specification and scheduled of quantities shall be furnished by the Architect to the Contractor. The Architect shall furnish within such time, as he may consider reasonable, one copy of any additional drawing, which is his opinion, may be necessary for the execution of any part of work. Such copies shall be kept at the works, and the architect or his representatives shall, at all reasonable time have access to the same and shall be return to the Architect by the contractor before the issue of the Final certificate. The contract shall remain in the custody of the Architect, and shall be produced by him at his office as and when required by the Employer or by the contractor.

2. INSPECTION OF DRAWINGS

Before filling in the tender, the contractor will have to check up all drawings/specification and schedule of quantities, and will have to get an immediate clarification from the employer/Architect on any point that he feels is vague or uncertain. No claim of damages or compensation will be entertained on this account.

3. EXECUTION OF WORK (PRICES INCLUDE)

The whole of the work is described in the contract a (including the schedule of Quantities, the specifications and all drawing pertaining there to) and as advised by Employer / Architect from time to time is to be carried out and completed in all its parts to the entire satisfaction of the Employer /Architect. Any minor details of the work which may not have been definitely referred to in this contract, but which are usual in practice and essential to the work, are deemed to be include in this contract. Rates MENTIONED in the Schedule ARE inclusive of all frights, Royalties, duties, etc., as well as transportation, so as to execute the contractor as per the rules and regulations of Local Bodies, State Government and Government of India.

The rates are inclusive of all charges for:

a) Labor, maintenance fixing, carrying, cleaning, making good, hauling, watering etc
b) Plant, machinery, scaffolding, framework, English ladders, ropes, nails, spikes, tools, materials and workmanship protection from weather, shuttering, temporary supports, platform and maintenance of the same.
c) Covering for the walling and other works during inclement weather or striking or whenever directed as necessary.

Signature of contractor

a) The rates quoted by contractor shall include removal of all the existing furniture and other material & dispose them off where ever required including the furniture and material for which the contract has given the pay back offer.

4. SITE SUPERVISION

The contractor shall appoint at his own cost competent and adequate number of qualified Engineers at site, for (1) joint measurements and preparations of bills, (2) for testing materials at site and outside laboratory, (3) for other general supervision. Their appointment shall be approved by the Employer / Architect. The site Engineers shall not be removed from the site without the written consent of the Employer / Architect.

5. DIMENSIONS

Figures, dimensions, are in all case to be accepted preferences to scaled sizes. Large-scale details take precedence over small scale drawings. In case of discrepancy, the contractor is to ask for a clarification before proceeding with the work. Accordingly if any work is executed without prior clarification it is liable to be rejected and shall not be paid for.

6. PROGRAMME OF WORKS

Contractor shall have to prepare and submit the CPM/PERT charges for employer approval immediately after issue of the work order and display the approved charts in the site office. He shall also make bar charts indicating individual items and during the progress of work he shall update the bar charts showing the proportionate progress of work every week.

He shall strictly adhere to the program of works as per CPM/PERT charts showing the proportionate progress of work.

7. PROCUREMENT OF MATERIALS

Contractor shall procure all the materials for the work from the open market. Time is the essence of the contract. Acceptance of the completion date by the contractor shall mean that he has taken into consideration the availability of all material of approved make and quality in sufficient quantities at site to enable him to complete the entire work in the stipulated period. Contractor will get sample of all materials approved by the Employer before placing order / purchase / procurement. They shall conform to I.S. codes and or tender specification as applicable.

For all materials the contractor shall quote for the best quality of the materials of best make / source or supply and it will be got approved by Employer before procurement. In case sufficient quantities of approved quality materials from approved source are not available in time, contractor may have to procure the same from neighboring area with longer leads as required and directed at no extra cost. The material will be, however as per relevant I.S code as and wherever applicable.

8. UNFIXED MATERIALS

When any materials intended for the works shall have been placed at site by the Contract, such material shall not be removed there from (except for the purposes of being used on the works) without the written authority of the Employer / Architect and when the contractor shall have received payment in respect of any certificate in which the architect shall have stated that he has taken in to account to value of such unfixed materials on the works such material shall become the property of the Employer and the contractor shall be liable for any loss or damage to any such materials.

9. CUSTODY AND SECURITY OF MATERIALS

The contractors shall be responsible for the custody and security of all materials and equipment at site and he

will provide full time watchman / watchmen to lock after his materials, stores equipments etc.

10. RATES

Percentage rates by the contractor shall hold good for all the work carried out to any height and depth as shown in detailed drawings and as required and directed by the Architect.

Percentage Rates quoted by the contractor shall also hold good for any small work at any place at site.

11. PRICES FOR EXTRAS ETC., ASCERTAINMENT

The rates of extra items will be ascertained as below
a) The rates will be derived from the rates of items already quoted in the original tender for the extra work.
b) Where extra work cannot be properly measured or valued, the contractor shall be allowed any work prices at the net rates stated in the tender or the priced schedule of quantities, or if not so stated, then in accordance with the local day work, rates and wages for the district, provided that in either case vouchers specifying the daily time (and if required by the Architect, the workmen's name) and materials employed at or before the end of the week following that in which the work has been executed.
c) The measurements and valuations in respect of the extra items of contract shall be completed within the 'period of final measurement' or within three months of the completion of the contract works as defined under clause (Certificate of Virtual Completion)

12. EXTRA ITEMS RATES

The work or extra items shall be started only after the approval of extra items rates by client / Architect. Rates for additional or extra items work which cannot be derived from the contract item rates shall be calculated on the basis of actual cost plus 15 % for profit.

13. DRAWINGS AND INSTRUCTIONS

A set of major drawings along with the contract documents shall be provided to the contractor. For any clarifications or further drawings are required by the contract, during or before the start of construction work, the Contractor shall inform the employer/Architects in writing to provide the same. Working details will be given to the contractor from time to time during the progress of work as and when required. In case of other drawing is required by the contractor he will give a minimum ten days notice to the Employer / Architect.

14. FAILURE BY CONTRACTOR COMPLY WITH ARCHITECT EMPLOYER'S INSTRUCTIONS

If the contractor after receipt of written notice from the employer/architect requiring compliance with such further drawings and / or instruction, fails within seven days to comply with the same, the Employer / Architect may employ and pay other persons to execute any such work whatsoever as may be necessary to give effect thereto and all cost incurred in connection there with shall be recoverable from the contractors by the Employer as a debit or may be deducted from any money due or which become due to the Contractors.

15. INFORMATION TO BE SUPPLIED BY THE CONTRACTOR

The contractor shall furnish the Employer / Architect the following:
a) Detailed industrial statistics regarding the labor employed by him etc
b) The Power of Attorney, name and signature of his authorized representative who will be in charges for the execution of work
c) The list of technically qualified persons employed by him for the execution of this work.
d) The total quantity and quality of materials used for the works.
e) The list of plant and machinery employed for this work.

16. ARCHITECT'S DELAY IN PROGRESS

The Architect may delay the progress of the works in case of rains or otherwise, without vitiating the contract and grant such extension of time with the approval of the employer for the completion of the contract as he may think proper and sufficient in consequences of such delay, and the contractor, shall not make any claim for compensation or damage in relation thereto.

17. CERTIFICATE AND PAYMENTS

The contractor shall be paid by the Employer from time to time, by installments under interim Certificates to be issued by the Architect and Bank's Engineer to the contractor on account of the works executed by the contractor when in the opinion of the Architect, work to the approximate value, named in the Appendix as 'Value of work for interim Certificates' (or less at the reasonable discretion of the Employer / Architect) has been executed in accordance with this contract, subject however, to a retention of the percentage of such value need in the Appendix hereto mentioned as 'retention percentage for interim Certificates' until the total amount retained shall reach the sum named in the appendix as Total Retention money after which time the installments shall be up to the full value of the work subsequently so executed in the interim Certificate, such amount as he may consider proper on account materials delivered upon the site by the Contractor for use in the work.

And when the works have been virtually completed and the Architect shall have certified in writing that they have been completed, the contractor shall be paid in accordance with the Certificate issued by the Architect the sum of money named in the Appendix after satisfying themselves as 'Installment after Virtual Completion 'being a part of the said 'Total Retention Money'.

The Contractor shall be entitled to the payment of the final balance in accordance with the final Certificate to be issued in writing by the Architect at the expiration of the period refer to as ' The Defect Liability Period' in the Appendix hereto, from the date of Virtual Completion or as soon as after the expiration of such period as the work shall have been finally completed and all defect made good according to the true intent and meaning hereof, whichever shall happen, provided always that the issue by the Architect of any certificate during the progress of the works or after the completion shall not relieve the Contract from his liabilities in cases of fraud , dishonesty or fraudulent concealment relating to the works of materials or any matter dealt within the certificate, and in case of all defects and insufficiency in the works or materials which reasonable examination world have disclosed. No certificate of the Architect shall of itself be conclusive evidence that any works and materials to which it relates are in accordance with the contract.

The Architect shall have power to withhold any certificate if the works or any part thereof is not being carried out to his / employer satisfaction.

The Architect may by any Certificate make any correction in any previous Certificate, which shall have been issued by him.

18. DELAYED PAYMENTS

Any amounts payable by the Employer to the contractor in pursuance of any Certificate given by the Architect hereunder shall, if not paid within the 'Period of honoring of Certificate' no interest will be paid by the Employer.

19. FORCE MAJEURE

Neither party shall be held responsible by the other for breach of any condition of this agreement attributable to any 'Act of God' Act of state, lockout of control or any other reason, beyond the control of the parties and any breach of clauses arising from much force majeure conditions as aforesaid shall not be regarded as a breach of the provision of this Agreement.

20. INCOME-TAX

Income Tax shall be deducted at source by the client from the contractor' interim and final bill payments as per Statutory Regulations.

Signature of contractor

21. SITE MEETINGS

A senior representative of the contractor shall attend weekly meetings at works site and in addition meetings as and when arranged by employer / Architect to discuss the progress of the work and sort out problems, if any and ensure that the work is completed in the stipulated time.

22. SCHEDULE OF APPROXIMATE QUANTITIES AND RATE

1. The quantities given herein are approximate and they are subjected to alterations omissions, deductions or additions as provided for in the conditions of this contract and do not necessarily show the actual quantities of the work to be done.

2. It is to be expressly understood that the measured work is to be taken net (notwithstanding) any custom or practice to the contrary according to the actual quantities when in place and finished according to the drawings or as may be directed from time to time by the employer and the cost calculated by measurements or weight, at the respective prices, without any additional charge for any necessary or contingent works connected there with. The rates quoted are for work in site and complete in every respects.

3. If any operation of work, which is specified in the respective items mentioned in the schedule of quantities, is not executed by the contractor then proportionately the rate quoted in the schedule shall be re-fixed.

23. ACTION WHERE THERE IS NO SPECIFICATION

In case of any class of work for which is there is no specification mentioned, the same will be carried out in accordance with the Indian Standards Specifications subject to the approval of the Employer / Architect.

24. ACCIDENT AT SITE

The contractor shall be responsible for the safety of persons employed by him on the works. This shall be without prejudice to the responsibility of the contractor under the Insurance Clause of the general conditions. Contractor shall take all precaution detailed in the safety code attached separately.

25. TYPOGRAPHICAL CLERICAL ERRORS

The Employer / Architect clarification regarding partially omitted particulars of typographical or Clericals errors shall be final and binding on the contractors.

26. WORK PERFORMED AT CONTRACTOR'S RISK

The contractor shall take all precautions necessary and shall be responsible for the safety of the work and shall maintain all lights, goods, signs, temporary passages or other protection necessary for the purpose. All works shall be done by the contractor's risk and if any loss or damage shall result from fire or from others cause, the contractor shall promptly repay or replace such loss or damage free from all expenses to the employer.

The contractor shall be responsible for any loss or damage to materials, tools or other articles used held for use in connection with the work. The work shall be carried on to completion without interferences with the operations of existing machinery or equipment, if any.

27. SPECIAL CONDITIONS OF CONTRACT

In the event of any discrepancy with clauses mentioned anywhere else in the tender with the clauses mentioned within special conditions of contract, the clauses mentioned within the special conditions of contract shall supersede those mentioned elsewhere.

Signature of contractor

28. CONTRACTOR'S LABOUR REGULATIONS

Short title:

1. These regulations may be called the "contractor labour regulations."

2. **Definitions :–** in these regulations, unless otherwise expressed or indicated, the works and expressions shall have the meaning hereby assigned to them respectively, that is to say :

   (i) "Labour" means worker employed by the Bank's contractor directly or indirectly through a sub-contractor or other persons or by an agent on his behalf of a payment not exceeding Rs. _____/- per month and will not include supervisory staff like overseers etc.

   (ii) "fair wages" means wages whether for time or piece work notified at the time of inviting tenders for the work and where such wages prescribed by the government of India in the ministry of labour and employment vide Sl.No. 1917 published in the gazette of India, extraordinary part - ii section (3) sub-section (ii) dated 19-5-1969.

   (iii) "contractors' shall include every person whether a sub-contractor or headman or agent employing labour on the work taken on contract.

   (iv) "Wages" shall have the same meaning as defined in the payment of wages act and includes time and piece rate wages.

2. a. Normally working hours if an adult employee should not exceed 9 hours a day and in case of a child 4 1/2 hours a day. The working day shall be so arranged that inclusive of interval for rest, if any, it shall not spread over more than 12 hours on any day.

2.b. When an adult worker is made to work for more than 9 hours on any day or for more than 48 hours in any week. he shall be paid overtime for the extra hours put in by him at double the ordinary rate of wages. Children shall not be made to work extra.

2.c. Every worker shall be given a paid weekly holiday normally on Sunday in accordance with the provisions of minimum wages (central) rules, 1960 as amended from time to time irrespective of whether such worker is governed by the minimum wages act 1948 or not.

3 **Display of notice regarding wage etc. the contractor shall:**

(a) Before the commences his work on contract, display and correctly maintain and continue to display correctly maintain in a clean legible condition in conspicuous places on the work, notice in English and in the local Indian language spoken by the majority of workers, giving the rate of wages which have been certified by the executive engineer, ZONAL labour commissioner fair as wages and the hours of work for which such wages are earned, and

(b) Send a copy of such notices to the certifying officer.

2. Payment of wages under central govt. wages act:–

(i) Wages due to every worker shall be paid to him direct.
(ii) All wages shall be paid in current coin or currency or in both.
(iii) Arrears claimed after 3 months after the completion of the work shall not be entertained.

3. Fixation of wage periods:–

(i) The contractor shall fix the wage periods in respect of which the wages shall be payable.
The minimum daily rates of wages fixed under notification of the government of India in the ministry of labour and employment no. 1972 dated 10-5-78 are inclusive of wages for weekly day of restyle and the question of extra payment for week holiday would not arise.

(ii) No wage period shall exceed one month.

(iii) wages of every employed on the contract shall be paid (a) in case of establishments in which wage period is one week within 3 days from the end of the wage period and (b) in the case of other establishments before the expiry of the 7th day or 10th day from the end of the wages period according

Signature of contractor

to the number of workers employed in such establishment does not exceed 1000 or exceeds 1000.

(iv) When the employment of any worker is terminated by or on behalf or the contractor the wages earned by him shall be paid before the expiry the day exceeding the one on which his employment is terminated.

(v) All payment of wages shall be made on a working day except when the work is completed before the expiry of the wage period in which case final payment shall be made within 48 hours of the last working day at work site and during the working time.

Note: The term "working day" means a day on which work on which the labor employed is in progress.

6. wage book and wage slips etc. : the contractor shall maintain a wage book of each worker in such form as may be convenient at the place of work, but the same shall include the following particulars :-

(a) Name of the worker.
(b) Rate of daily or monthly wages.
(c) Nature of work on which employed.
(d) Total number of days worked during each wage period.
(e) Dates and periods for which worked overtime.
(f) Gross wages payable for the work during each wage period.
(g) All deductions made from the wage with an indication in each case of the ground for which the deduction is made.
(h) Wages actually paid for each wage period.
(i) Signature or thumb impression of the worker.
(j) The contractor shall also issue a wage slip containing the aforesaid particulars to each worker employed by him on the work at least a day prior to the day of disbursement of wages.
(k) The contractor shall issue the employment card in the prescribed form iii to each worker on the day of work or entry in to his employment. If the worker has already any such card with him from the previous employer, the contractor shall merely endorse that employment card with relevant entries. On termination of employment the employment card shall again be endorsed by the contractor and returned to the worker.
(l) **The contractor shall issue an attendance-cum-wages card as perform:**
Attached to each worker on the day of each worker on entry into his employment.

7. Register of unpaid wages: – the contractor shall maintain a register of unpaid wages in such form as may be convenient at the place of work but the same shall include the following particulars:

(a) Full particulars of the laborers where wages have not been paid.
(b) Reference number of the muster roll and wage register.
(c) Rate of wages.
(d) Wage period
(e) Total amount not paid
(f) Reasons for not making payment
(g) How the amount of unpaid wages was utilized.
(h) Acquaintance with dates.

8. Register of accidents: the contractor shall maintain a register of accidents in such form as may be convenient at the work place but the same shall include the following particulars:

(a) Full particulars of the laborers who met with accident.
(b) Rate of wages.
(c) Sex
(d) Age
(e) Nature of accident and cause of accident.
(f) Time and date of accident
(g) Date and time when admitted in hospital
(h) Date of discharge from the hospital
(i) Period of treatment and result of treatment.
(j) Percentage of loss of earning capacity and disability as assessed by the medical officer.

Signature of contractor

(k) Claim required to be paid under worker's compensation act.
(l) Date of payment of compensation.
(m) Amount paid with details of persons to whom the same was paid.
(n) Authority by whom the compensation was assessed.
(o) Remarks.

9. Fines and deductions which may be made from wages:

(i) The wages of a worker shall be paid to him without any deduction of any kind except the following:
(a) Fines.
(b) Deduction for absence from duty i.e. from the place or the places whereby terms of his employment he required to work. The amount of deduction shall be in proportion to the period for which he was absent.
(c) Deduction for damage to or loss of goods expressly entrusted to the employed person for custody, or loss of money or any other deduction which he is required to account, where such damage or loss is directly attributable to this neglect or default.
(d) Deduction for recovery of advances or for adjustment of over-payment of wages, advance granted shall be entered in a register.
(e) Any other deduction which the central government may from time to time allow.
(ii) No fine should be imposed on any worker save in respect of such acts and omission on his part as have been approved by the chief labour commissioner.
(iii) No fine shall be imposed on a worker and no deduction for damage or loss shall be made from his wages until the worker has been given an opportunity of showing cause against such fines or deductions.
(iv) The total amount of fine which may be imposed in any one wage period on a worker shall not exceed an amount equal to three paisa in a rupee of wages, payable to him in respect of that wage period.
(v) No fine imposed on any worker shall be recovered from him by installment, or after the expiry of sixty days from the date on which it was imposed.
(vi) Every fine shall be deemed to have been imposed on the day of the act or omission in respect of which it was imposed.

10. Register of fines, etc.:

(i) The contractor shall maintain a register of fines and a register of deduction for damage or loss in form nos. 1 & 2 respectively which should be kept at the place of work.
(ii) The contractor shall maintain both in English and the local Indian language, a list approved by the chief labour commissioner clearly starting the acts and omissions for which penalty or fine may be imposed on a workman and display it in a good condition in a conspicuous place of the work.

11. Preservation of registers: – the wage book the wage slips, the register of unpaid wages, the register of accidents, the register of fines, deductions required to be maintained under these regulations shall be preserved for 45 days after the date of last entry made in them and shall be made available for inspection by the engineer-in-charge labour welfare officer or any other officer authorized by the chief labour commissioner in this behalf.

12. Powers of labour welfare officer to make investigation or enquiry

The labour welfare officer or any other person authorized by the central government on their behalf shall have power to make enquiries with a view to ascertaining and enforcing due and proper observance of the fair wage clauses and provisions of these regulations. He shall investigate into any complaint regarding the default made by the contractor or sub-contractor in regard to such provision.

13. Report of labour welfare officer

The labour welfare officer or other persons authorized as aforesaid shall submit a report of result of his investigation or enquiry to the executive engineer concerned indicating the extent, if any, to which the default has been committed, with a note that necessary deduction from the contractor's bill be made and

Signature of contractor

the wages and other dues be paid to the laborers concerned. In case an appeal is made by the contractor under clause 14 of these regulations actual payment to the laborers will be made by the executive engineer after the zonal labour commissioner has given his decision on such appeal.

(a) The executive engineer shall arrange payments to the labors concerned within 45 days from the receipt of the report from the labour welfare officer or the zonal labour commissioner as the case may be.

14. Appeal against the decision of labour welfare officer:

Any person aggrieved by the decision and recommendations of the labour welfare officer or other person so authorized may appeal against such decision to the zonal labour commissioner concern within 30 days from the date of decision, forwarding simultaneously a copy of his appeal to the executive engineer concerned but subject to such appeal, the decision of the officer shall be final and binding upon the contractor.

15. Prohibition regarding representation through lawyer:

(a) A workman shall be entitled to be represented in any investigation or enquiry under this regulation by:

(a) An officer of a registered trade union of which he is a member.
(b) An officer of a federation of trade unions to which the trade union referred to in clause (a) is affiliated.
(c) Where the employee is not a member of any registered trade union, by any officer, of a registered union, connected with, or by any other workman, employed in the industry in which the worker employed.

(ii) An employer shall be entitled to be represented in any investigation or enquiry under this regulation by;

(a) An officer of any association of employers of which he is a member.
(b) An officer of a federation of association of employers to which the
Association referred to in clause (a) is affiliated.
(c) Where the employer is not a member of any association of employers' by an officer of association of employers connected with or by any other employer, engaged in the industry in which the employer is engaged.

(iii) No party shall be entitled to be represented by a legal practitioner in any investigation or enquiry under these regulations.

16. Inspection of books and slips:

The contractor shall allow inspection of the wage books and the wage slips the register of unpaid wages, the register of a accident, and the register of fines and deduction to any of his workers or to his agent at a convenient time and place after due notice is received or to the labour welfare officer or any other person authorized by the central government on his behalf.

17. Submission of returns:

The contractor shall submit periodical returns as may be specified from time to time.

18. Amendment: the central government may from time to time add to or amend the regulation and on any question as to the application, interpretation or effect of these regulations the decision of the chief labour commission or deputy chief labour commission to the government of India, or any other person authorized by the central government in that behalf shall be final.

32. <u>Safety code</u>

Scaffolds:

(i) Suitable scaffolds should be provided for workmen for all works that cannot safely be done from the

Signature of contractor

ground, or from solid construction except such short period work as can be done safely from ladders. when a ladder is used an extra mazdoor shall be engaged for holding the ladder and if the ladder used for carrying material as will, suitable footholds and hand holds shall be provided on the ladder and the ladder shall be given an inclination not steeper than 1/4 to 1 (1/4) horizontal and 1 vertical)

(ii) Scaffolding or staging more than 4m. above the ground or floor, swung or suspended from an overhead support or erected with stationary support shall have a guard rail properly attached bolted, braced and otherwise secured at least 3 feet high above the floor or platform of such scaffoldings or staging and extending along the entire length of the outside and ends there of with only such opening as may be necessary for the delivery of materials. Such scaffolding or staging shall be so fastened as to prevent it from swaying from the building or structure.

(iii) Working platform, gangways, and stairways should be so constructed that they should not sag unduly or unequally, and if the height of the platform or the gangway or the stairway is more than 12 feet above the ground level on the floor level. They should be closely boarded, should have adequate width and should be suitably fastened, as described in (ii) above.

(iv) every opening in the floor of a building or in a working platform be provided with suitable means to prevent the fall of persons or materials by providing suitable fencing or railing whose minimum height shall be -3'0". Wherever there are open excavations in ground, they shall be fenced off by suitable railing and danger signals installed at night so as to prevent persons slipping into the excavations.

(v) Safe means of access shall be provided to all working platforms and the working places. Every ladder shall be securely fixed. No portable single ladder shall be over 9m. In length while the width between sides rail in rung ladder width shall in no case be less than 290mm. For ladder up to and including 3m. In length. For longer ladders this width should be increased at least 20mm. for each additional meter or length.

(vi) A sketch of the ladders and scaffolds proposed to be used shall be prepared and approval of the engineer obtained prior to construction.

Other safety measures

(vii) All personnel of the contractor working within the plant site shall be provided with safety helmets. All welders shall wear welding goggles while doing welding work and all metal workers shall be provided with safety gloves. Persons employed on metal cutting and grinding shall wear safety glasses.

(viii) Adequate precautions shall be taken to prevent danger from electrical equipment. No materials on any of the sites of work shall be so stacked or placed as to cause danger or inconvenience to any person or the public.

Signature of contractor

FORM OF AGREEMENT

ARTICLES of AGREEMENT made this _____ day of _____ year 2020 between the **State Bank of India, RACPC-2, Visakhapatnam** (Hereinafter referred to as the "Employer/Owner/client" which expression shall, unless excluded by or repugnant to the context, includes its successors and assigns) of the ONE PART and _____ of _____(Hereinafter referred to as "Contractor" unless excluded by or repugnant to the context, includes its successors and assigns) of the OTHER PART.

WHEREAS the Employer intends to carry out **Interior works AT New Premises of RACPC-II, Visakhapatnam, Andhra Pradesh shall herein after referred to as "Project".**

AND WHEREAS for the purpose of the above said project, the Employer invited sealed tenders from experienced, resourceful and bonafied contractors vide his Notice Inviting Tender (NO._____dated._____).

WHEREAS the contractor submitted his Tender Documents containing Notice Inviting Tender, General notes, General Conditions of Contract, Special conditions, Schedule of approximate quantities and rates , Form of Agreement, General Specification, Approved manufacturers/ natural source of materials, Declaration, Technical Specifications as in Schedule of Quantities etc. for the above said project, (Hereinafter collectively referred to as the "said conditions"), duly signed on each page as a token of his acceptance of the same, along with requisite Earnest Money Deposit.

AND WHEREAS out of the Tenders received, the Tender of the contractor was found to be most suitable for the project.

AND WHEREAS the Employer has accordingly issued the work order (NO._____dt._____) to the contractor subject to his furnishing the requisite Security Deposit.

AND WHEREAS the Contractor has accepted the aforesaid Work Order vide his letter of acceptance NO._____ dt._____ at Tender Value of Rs._____.

NOW, therefore, it is hereby agreed to and between the parties as follows:

1) Contract documents

The following documents shall constitute the Contract Documents.
I. This Article of Agreement.
II. Tender Document submitted by the Contractor including the "said conditions", N.I.T and Schedule of quantity.
III. All correspondence between the Employer and the Contractor from the date of issue of N.I.T and the date of issue of work order.
IV. Work order No. _____dt._____

2) In consideration of the payments to be made to the Contractor as hereinafter provided the Contractor shall upon and subject to the said conditions, execute and complete the contracted project works shown upon the said drawings etc. and such further detailed drawings as may be furnished to the contractor by the said Employer and described in the said Specifications and the said Schedule of Quantities.

3) Notwithstanding what are stated in the N.I.T conditions of Tendering, Conditions of Contract of herein stated before, the Employer reserves itself the right of altering the drawings and the nature of the work and addition to or omitting any items of work or of having portions of same carried out departmentally or otherwise and such alterations or variations shall be carried out without prejudice to this contract.

4) As mentioned in Article 1 above, the "said conditions" shall be read and be treated as forming part of this agreement and parties hereto will respectively be bound thereby and to abide by and submit themselves to the conditions and stipulations and perform the same on their parts to be respectively observed and preferred.

Signature of contractor

5) Any dispute arising under this agreement shall be referred to the Arbitration in a manner specified in the General Conditions of the Contract and all legal disputes shall be limited within the territorial jurisdiction of the Hyderabad thereto. The decision of the arbitration shall be final and binding on both the parties.

IN WITNESS WHEREOF THE PARTIES to their present have here under set and subscribed their hands, the day, month and year first above written.

Signed and delivered for and on behalf of
State Bank of India, Shri._____ its duly authorized official, In the presence of –
1. (Name and Address)

2. (Name and Address)

Signed and delivered for and on behalf of

The Contractor _____by Shri_____ his duly authorized official, in the presence of –
1. (Name and Address)

2. (Name and Address)

<u>READ, UNDERSTOOD AND ACCEPTED</u>

SIGNATURE OF THE CONTRACTOR WITH SEAL
DATE

Signature of contractor

GENERAL SPECIFICATIONS

Unless specified otherwise and whether specified in the schedule of quantity or not, the contractor shall adhere to following general specification/ guideline for the items of schedule of quantities.	
1	All laminate (provided on all exposed surface) shall be conforming to IS : 2046-1995 and shall be of 1mm in approved regular shade and shall be fixed in combination of multiple color, shades as approved.
2	All types of painting to be in two coats of over the leveled and smooth surface so prepared with two/ all required coats of putty and primer of specified grade for such surface preparations. All inside surfaces of drawers, shutters etc. shall be treated as internal surface.
3	Godrej locks of instructed type shall be provided to all door, storage units, drawer etc.
4	All storage/ side units shall be fixed with box hinges and the drawers shall slide on telescopic channels and all inside surfaces of these shall be fixed with 0.8mm thick laminate whether specified in the schedule of quantity or not.
5	The design pattern indicated in the tender drawings is tentative only and the final design pattern and the shades of the laminate to be used shall be decided at the site by the Engineer in charge..
6	12mm thick soft boards shall be used for display board only, duly covered with upholstery costing in a range of Rs.100.00 to Rs 125.00 per meter of cloth.
7	All type of work stations i.e. the officer/ clerical tables, counters, work stations etc shall have a foot rest of polished M.T.W. of 4" x 1.5" size and a stand for CPU, made with 19mm ply/bison and fixed on adjacent sides. All inside surfaces of these shall be fixed with 0.8mm thick laminate whether specified in the schedule of quantity or not.
8	Wherever specified the working tops shall be laid with float glass cut to shape and edges polished. The position of wire managers shall be cut to shape precisely.
9	Provisions shall be made within the partitions/ Tables/counters/work places wherever necessary to enable conduit for electrical and LAN cabling.
10	Color pattern on the walls and the ceiling shall be decided by the Architect/Engineer in charge.
11	Keyboards of approved quality to be used.
12	For any type of deviation (to any of above or subsequent instructions)contractor has to procure/ obtain the written instruction of the Architect/Engineer-in-charge for the purpose otherwise shall not do.
13	Any discrepancy in the site conditions shall be brought to the notice of the Architect/Engineer in charge.
14	The contractors shall visit the site and understand themselves the site conditions, the possible working hours and the resources available, etc., before quoting for the tender.
15	The height of the full height partitions shall be considered only till the false ceiling height, irrespective of the fact that the framework has to be fixed to the RCC slab.
16	Average height shall be considered for the surface area measurements of multi-level partitions, storage units and soft boards.
17	The site being working premises, work shall be carried out in a phased manner, after the office hours and on holidays. The premises shall be left clean for the daily functioning. No additional cost shall be considered for this factor.
18	Even if not mentioned in the specification/drawing, it should be clearly understood that all open edges of plywood shall be provided with wood beadings or as instructed by engineer in charge
19	Wood shall be seasoned, free from sap, knots, cracks and shall be of lighter grains. If required wood shall be tested in lab at contractor's expenses.
20	All partitions/paneling shall have provisions for conduits of electricity, telephone, computer, audio-visual, fire alarm, intercom etc
21	All tables/ counters should be provided with CPU stand of Earl(Bihari make of banks approved model) for keeping CPU below the counters and work stations and ledges.
22	The contractor should coordinate with electrical, Fire alarm, burglary alarm, camera agencies through Branch Manager, before carrying out False ceiling, Panelling work. The Interior contractor should ensure that no pipes are visible after carrying out these works.
23	Laminate design shall be of multi colour and multi design and will be finalized at the site.

READ, UNDERSTOOD AND ACCEPTED

Signature of contractor

LIST OF APPROVED MATERIALS

S.N	DESCRIPTION OF MATERIALS	NAME OF THE MANUFACTURERS
1	PLYWOODS (BWR conforming to IS 303)	CENTURY (ARCHITECT PLY) / GREEN (CLUB) / OPTIMA RED / SYLVAN / AUSTIN GOLD / AMULPLY (PLATIMUN), MAYUR PLY (GOLD), ARCHID
2	MDF(EXTERIOR GRADE) WITH DENSITY 750-850 KGS/CU.M CONFIRMING TO IS 12406-2003	GREENPLY/MERINO/TESA/ARCHID
3	FLEXI PLYWOOD-BWP(conforming to IS 303)	GOLDEN/ SARDA/ ARCHID/ GREENPLY/ CENTURY/ UNIPLY/ MAYUR/ SYLVAN /AMULPLY
4	BLOCK BOARD- CONFIRMING TO IS 11255-2003	NIKON/ GOLDEN/ TRUWUD/ MAYUR/ ARCHID/ GREENPLY
5	LAMINATE	CENTURY / GREEN / ROYALTOUCH / AMULYA MICA/ BRAVIA/ AICA /VIR/ ARCHID/ MERINO/ HERITAGE
6	LOCKS,	GODREJ / EBCO
7	HARDWARE	EFFICIENT GADGETS, EARL BEHARI(EBCO), HARDWIN, ETALICA
8	FLOOR SPRING / PATCH FITTINGS	EVERITE, DORMA / GODREJ, EGL/EBCO DOORSET OZONE
9	DOOR CLOSUR3ES/ STOPPER	DOORSET / EBCO /OZONE SS MATT FINISH-PUSH TYPE ONLY
10	NIGHT LATCHES	GODREJ/ DOORSET/EUPORA OF SS SS BRUCH FINISHED.
11	GLASSESS	AASAHI / TATA, MODI GUARD / SAINT GOBIAN
12	WOOD VENEER	CENTURY / GREEN / EURO
13	MINERAL FIBRE BOARD CEILINGS	ARMSTRONG OR APPROVED EQUIVALENT
14	GYP BOARD FALSE CEILING	INDIA GYPSUM LTD / USG / LAGYP
15	MS KEY BOARD TRAY WITH OR WITH OUT MOUSE TRAY	EBCO /HITTICH/INNOFIT/FETHERLITE
16	VERTICAL BLIND	VISTA / EGL / EQUAVALENT-SEE ITEM 15
17	MOTORISED / MANUAL OERATED BLINDS	VISTA LVOREL / MAC / HUNTER DOUGLASS
18	CPU TROLLY	EBCO / HETTICH / INNOFIT / FETHERLITE
19	MODULAR ITEMS LIKE CHAIRS / STORAGE UNITS, DRAWERS UNITS	FETHERLITE / GODREJ / MONARCH / WIPRO
20	CHEMICAL ADHESIVE	PIDILITE / QUICKFIX / LATTICRETE
21	ADHESIVES	MOVICOL / FEVICOL / ARALDITE
22	ALUMINIUM COMPOSITE PANEL	ALUDECOR /ALEX / ALUBOND / ALSTRONG / VIVA/ EUROBOND
23	VINYL FLOORING	LG/ WINNER/ ARMSTRONG / KRIISHNA
24	CORIAN TOPS(ACRALIC SOLID SURFACE)	LG / DU-POINT/ TRANQUIL DUNES
25	MELAMINE	ASIAN PAINT SHALIMAR ICI
26	PAINT	ASIAN/ NIPPON/ BERGER/ NEROLAC
27	GI DRY WALL PARTITION SYSTEM	GYPSTEEL/ US BORAL/ FRAME WORK/ RONDO/ BMS
28	TEXTURED PAINT	TERRACO/ SPECTRUM
29	VITRIFIED, CERAMIC, GALZED TILES	JOHNSON, SIMPOLO, KAJARIA, RAK
30	SANITARY FIXTURES	JAGUAR, HINDWARE, KOHLER
31	ENGINEERING WOOD FLOORING	UNITEX / EGO/ FLORTEX
32	Bison panel eqivalent	Bison india ltd

OR AS APPROVED BY ENGINEER/ARCHITECT

Signature of contractor

DECLARATION

INTERIOR WORKS AT NEW PREMISES OF RACPC-II, VISAKHAPATNAM

I/We have inspected the work site of PROPOSED NEW PREMISES OF RACPC-II, VISAKHAPATNAM Premises of State Bank of India and I/We have made me/ us fully acquainted with the local conditions in and around the sites of works, aware that work spot is running branch/new premises and Lay out drawings of works, drawings of each items etc. complete.

I/We hereby declare that I/ We have carefully gone through the conditions laid down in the Notice Inviting Tender, General notes, General Conditions of Contract, Special conditions, Schedule of approximate quantities and rates , Form of Agreement, General Specification, Approved manufacturers/ natural source of materials (i.e. all parts of Technical bid), Technical Specifications of schedule of quantities (i.e. all parts of Price bid), and clearly understood all the same and on the basis of the same I/ We have quoted our rates in the Schedule of Quantities/BOQ attached with the tender documents.

We accept all the terms and conditions of tender documents. We will abide by the technical specification mentioned in the tender. We here by undertake to use only specified material/ make as per the tender schedule.

I/ We hereby declare that, in particular during execution of all works at site; it will be my/ our sole responsibility to strictly adhere to/ meticulously follow the General Specification, Approved manufacturers/ natural source of materials, Technical Specifications of schedule of quantities, all drawings of layout and items.

For any type of deviation (to any of above or subsequent instructions), it will be my/ our responsibility to obtain the written instruction of the Engineer-in-charge for the same failing which it shall be deemed that I have carried out any such deviations at my own and I shall be duty bound to replace the all deviated material/ works from the site at my/ our cost as well as I shall be liable to penalized by the employer as deemed fit and for all such loses made thereof, I/ we shall not have any right to arbitrate in any manner.

I/ We hereby declare that I/ We shall obtain necessary drawings of items from employer in time and also shall uniformly maintain such progress as may be directed by the employer to ensure completion of same within the target date/ time as mentioned in the tender document.

Date: Signature and seal of Contractor/ Tenderer

Witness:

1.

2.

NOTE

ANY CLARIFICATIONS SOUGHT AFTER OPENING OF THE TENDERS WILL NOT BE ENTERTAINED AT ANY COST.

Signature of contractor

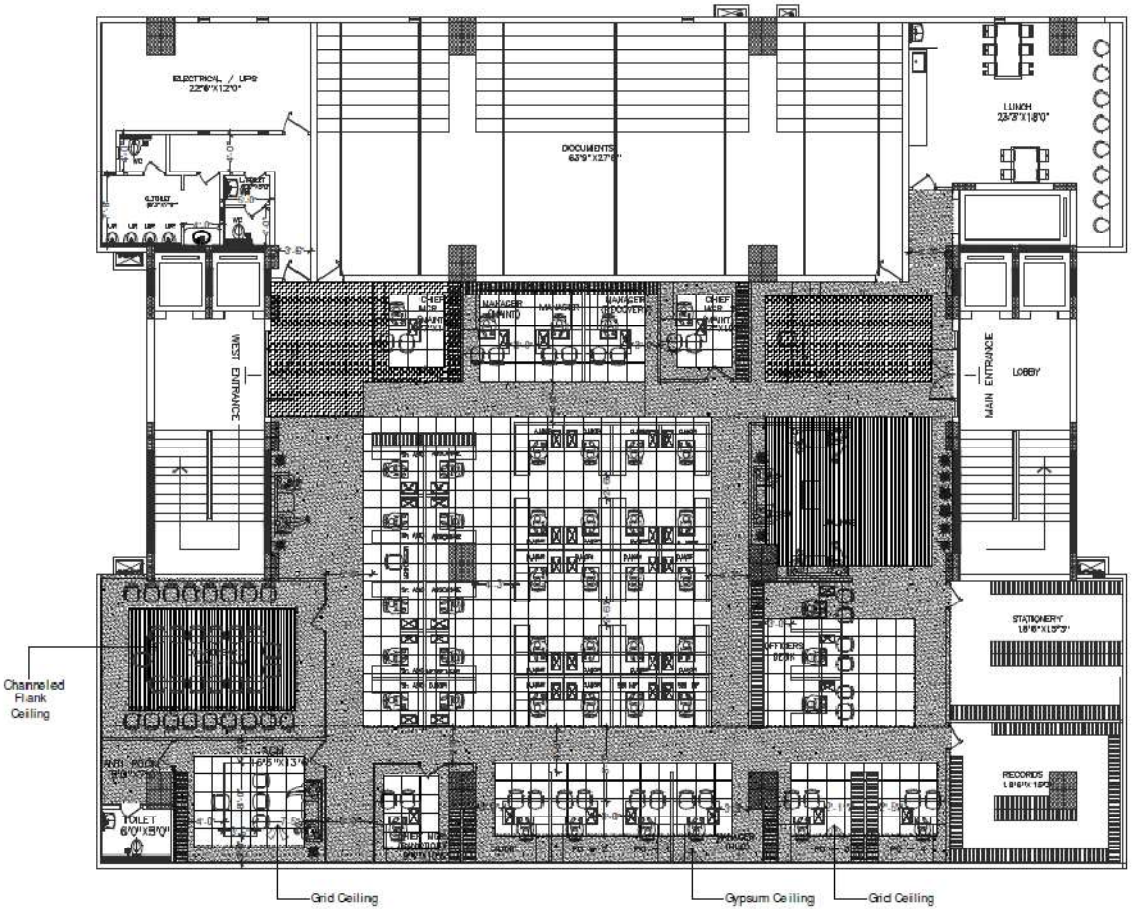

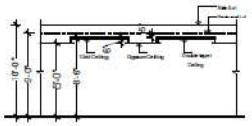

FALSE CEILING DETAILS		
S.NO	DESCRIPTION	
1	GYPSUM CEILING @ 9'0" ht.	
2	GRID CEILING @ 8'6" ht.	
3	DOUBLE LAYER CEILING @ 8'6" ht.	
3	GYPSUM CEILING @ 7'6" ht.	

DESIGN DISCOVERY
Architecture Interior design

HEAD OFFICE- HYDERABAD
#16,
AOC, Wellington Road
West Marredpally
SECUNDERABAD,
PIN CODE: 500026
E-MAIL: designdiscovery.i@gmail.com
MOBILE: +91 939 00 17070

BRANCH OFFICE: VIZAG
#9-45-9,
Old CBI Down,
Vidya Nagar
VIZAG,
PIN CODE: 530017
MOBILE: 93900 17070

DRAWN BY :
MALLISHWARI

NOTES
1. This drawing is a copyright of the Architect, it is not to be produced, copied, handed over to third party or used for any other purpose other than for which it is intended.
2. All dimensions shall be verified on site prior to start of work.
3. The Contractor no all check all dimensions, details & is responsible for the same. Any discrepancy shall be brought to the notice of the Arc. Dirct.
4. This drawing is to be not to scale.
5. This drawing sh ould be read in conjunction with elec and m ching & detail drawings.

N

CLIENT: STATE BANK OF INDIA
PROJECT: RACPC-II, VIZAG.
SBI

REVISIONS
SCALE :
DRAWING TITLE :
FALSE CEILING LAYOUT

Signature of contractor

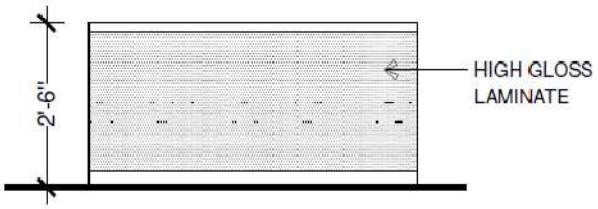

ELEVATION

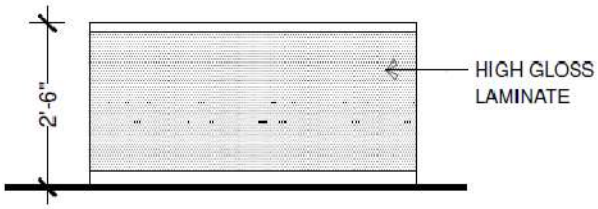

ELEVATION

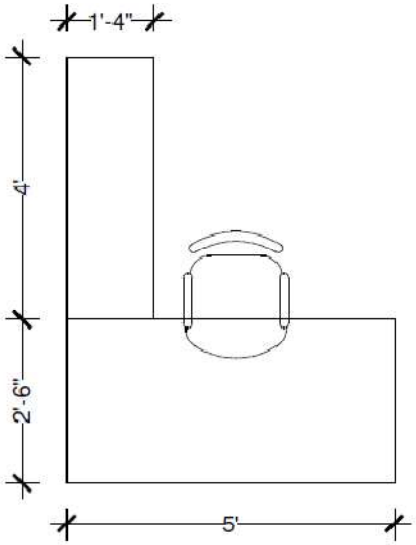

OFFICER TABLE 1

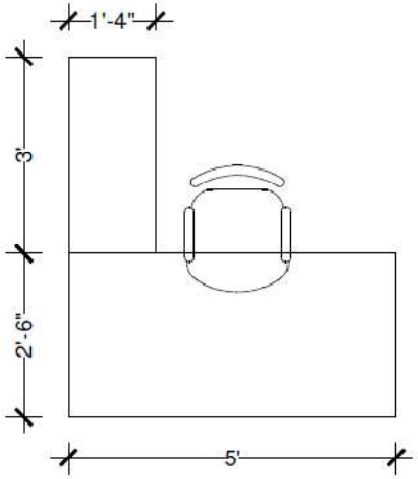

OFFICER TABLE 2

DESIGN DISCOVERY
Architecture Interior design

HEAD OFFICE: HYDERABAD
#16,
AOC, Wellington Road
West Marredpally
SECUNDERABAD.
PIN CODE: 500026
E-MAIL: designdiscovery.i@gmail.com
MOBILE: +91 989 06 17070

BRANCH OFFICE: VIZAG
#9-45-9,
Old CBI Down,
Vidya Nagar
VIZAG.
PIN CODE: 530017
MOBILE: 93900 1 7070

DRAWN BY :
MALLISHWARI

NOTES

1. This drawing is as copyright of the Architect, it is not to be produced, copied, handed over to third party or used for any other purpose other than for which it is intended.
2. All dimensions shall be verified on site prior to start of work.
3. The Contractor must check all dimensions, details & be responsible for the same. Any discrepancy shall be brought to the notice of the Architect.
4. This drawing is to be used & not scaled.
5. This drawing shall not be used in conjunction with other and/or using it, detailed drawings.

N

CLIENT: STATE BANK OF INDIA
PROJECT: RACPC-II, VIZAG.

REVISIONS

SCALE :

DRAWING TITLE :
OFFICER TABLE

Signature of contractor

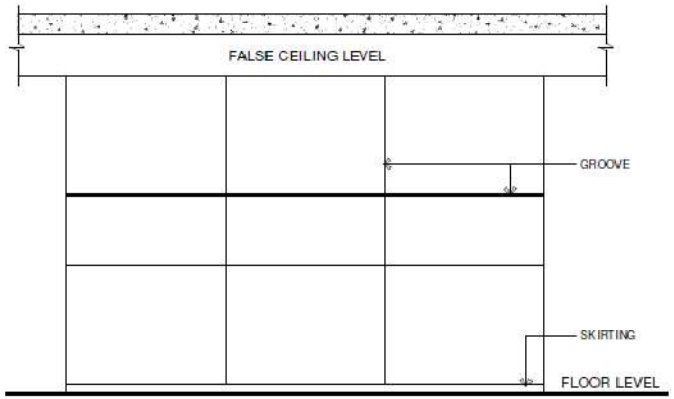

SOLID PARTITION ELEVATION

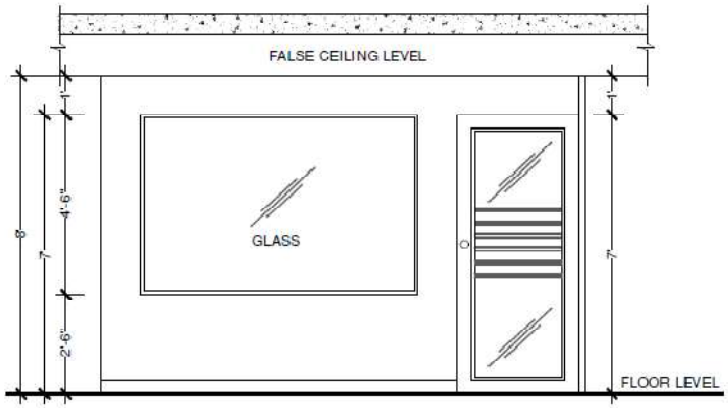

SEMI GLAZED PARTITION ELEVATION

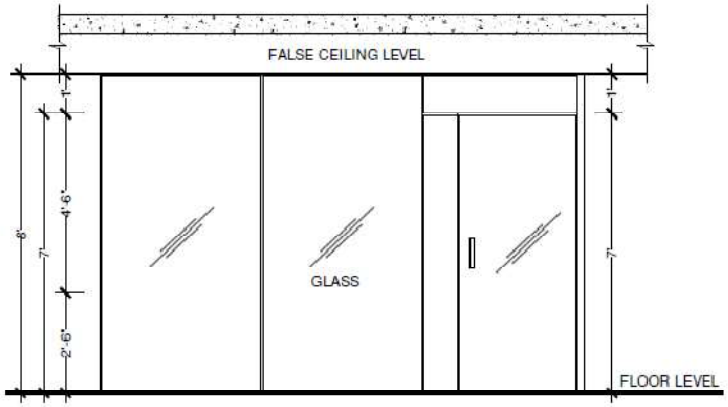

FULLY GLAZED PARTITION ELEVATION

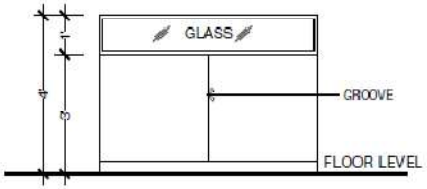

LOW HEIGHT PARTLY GLAZED PARTITION ELEVATION

DESIGN DISCOVERY
Architecture Interior design

HEAD OFFICE: HYDERABAD
#16, AOC, Wellington Road
West Marredpally
SECUNDERABAD.
PIN CODE: 500026
E-MAIL: designdiscovery_i@gmail.com
MOBILE: +91 939 00 17070

BRANCH OFFICE: VIZAG
#8-45-9,
Old CBI Down,
Vidya Nagar
VIZAG.
PIN CODE: 530017
MOBILE: 93900 17070

DRAWN BY : MALLISHWARI

NOTES
1. This drawing is a copyright of Design Discovery, it is not to be produced, copied, lended over to third party or used for any other purpose other than for which it is intended.
2. All dimensions shall be verified on site prior to start of work.
3. The Contractor is to check all dimensions, details & is responsible for the same. Any discrepancy shall be brought to the notice of the Architect.
4. This drawing is to be read with & not scaled.
5. This drawing shall be read in conjunction with other architectural & detailed drawings.

N

CLIENT: STATE BANK OF INDIA
PROJECT: RACPC-II, VIZAG.
SBI

REVISIONS

SCALE :

DRAWING TITLE :
PARTITIONS DETAILS

Signature of contractor

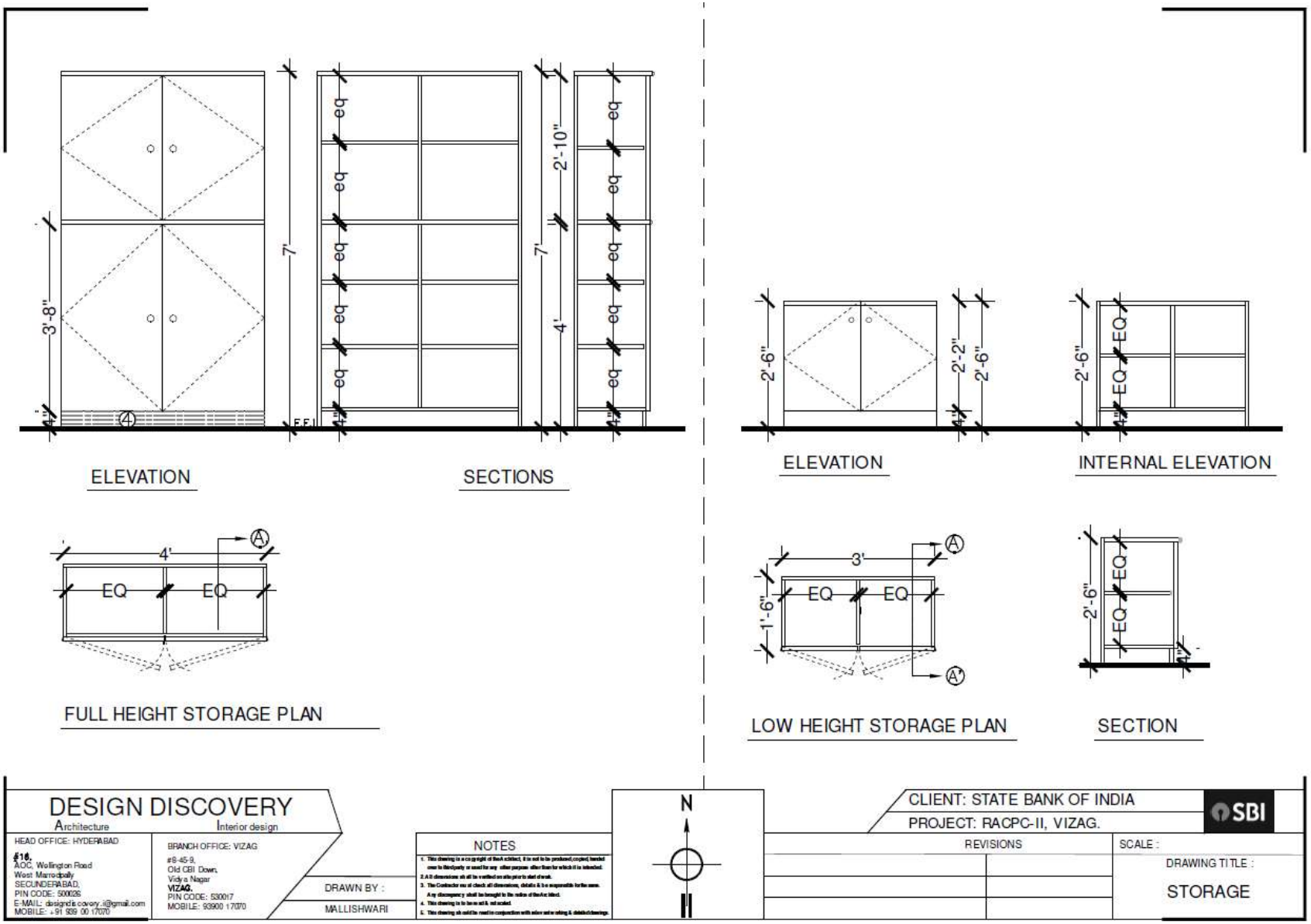

Signature of contractor

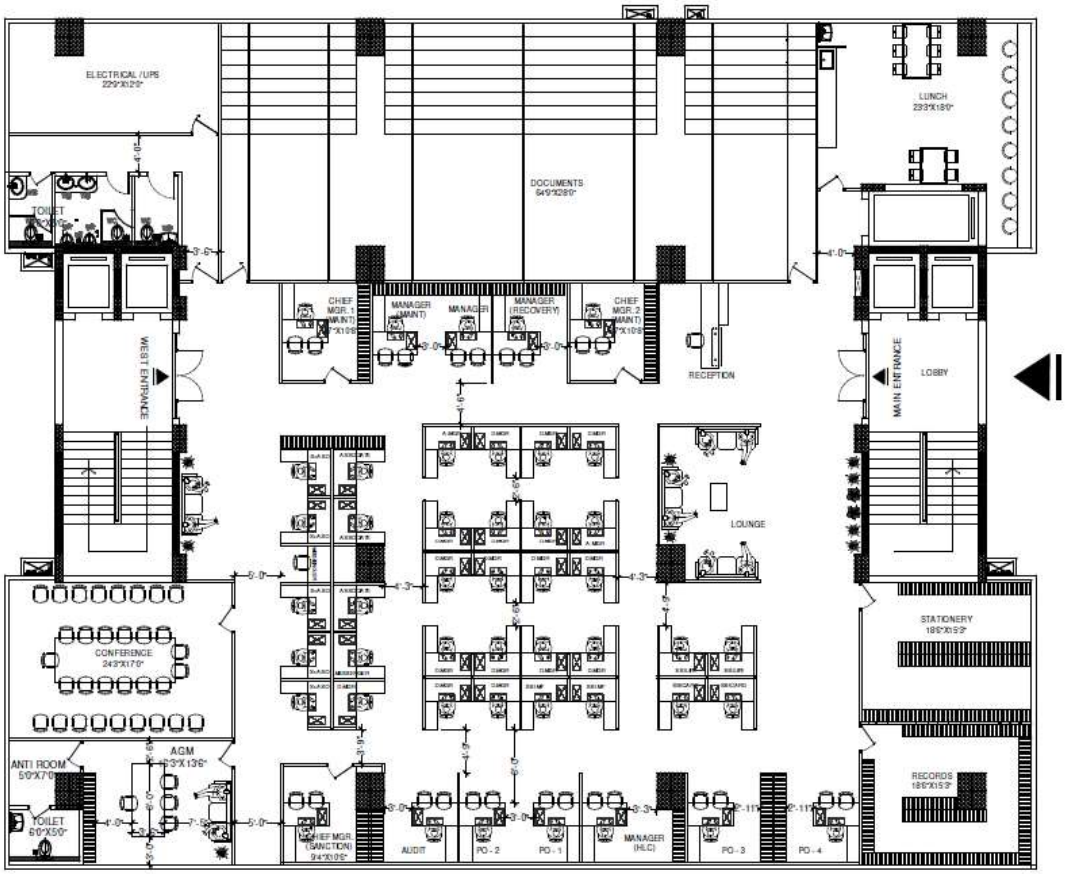

1.

2.

3.

4.

OPTION - 8

STAFF COUNT - 42 No.s
SBI Subsidiaries: 6 No.s
Total: 48 No.s

DESIGN DISCOVERY
Architecture Interior design

HEAD OFFICE: HYDERABAD
#16,
AOC, Wellington Road
West Marredpally
SECUNDERABAD,
PIN CODE: 500026
E-MAIL: designdiscovery.i@gmail.com
MOBILE: +91 929 00 17070

BRANCH OFFICE: VIZAG
#8-45-9,
Old CBI Down,
Vidya Nagar
VIZAG.
PIN CODE: 530017
MOBILE: 93900 17070

DRAWN BY :
MALLISHWARI

NOTES
1. This drawing is a copyright of Design Discovery, it is not to be produced, copied, handed over to third party or used for any other purpose other than for which it is intended.
2. All dimensions shall be verified on site prior to start of work.
3. The Contractor must check all dimensions, details & is responsible for the same. Any discrepancy shall be brought to the notice of the Architect.
4. This drawing is to be not to scale.
5. This drawing shall be read in conjunction with other and working & details drawings.

N

CLIENT: STATE BANK OF INDIA
PROJECT: RACPC-II, VIZAG.

REVISIONS

SCALE :

DRAWING TITLE :
INTERIOR LAYOUT

Signature of contractor

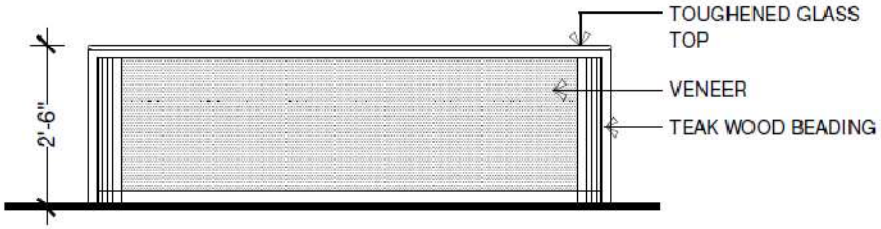

ELEVATION

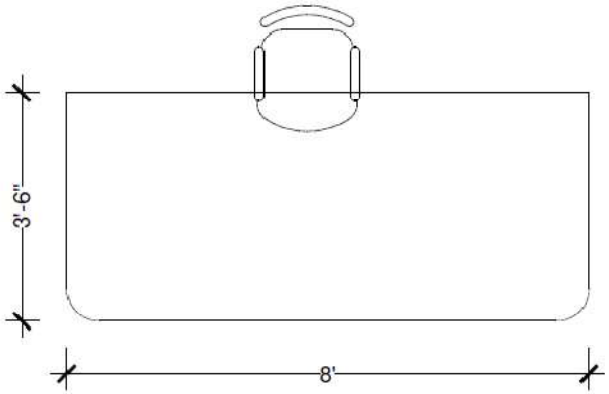

AGM TABLE PLAN

DESIGN DISCOVERY
Architecture Interior design

HEAD OFFICE: HYDERABAD
#16,
AOC, Wellington Road
West Marredpally
SECUNDERABAD,
PIN CODE : 500026
E-MAIL: designdiscovery.i@gmail.com
MOBILE: +91 939 00 17070

BRANCH OFFICE: VIZAG
#8-45-9,
Old CBI Down,
Vidya Nagar
VIZAG.
PIN CODE : 530017
MOBILE: 93900 17070

DRAWN BY : MALLISHWARI

NOTES

1. This drawing is a copyright of Design Discovery, it is not to be produced, copied, handed over to third party or used for any other purpose other than for which it is intended.
2. All dimensions shall be verified on site prior to shop drawing.
3. The Contractor must check all dimensions, details & be responsible for the same. Any discrepancy shall be brought to the notice of Design Discovery.
4. This drawing is to be not to scale.
5. This drawing shall be read in conjunction with other and existing all details & drawings.

N

CLIENT: STATE BANK OF INDIA
PROJECT: RACPC-II, VIZAG.

REVISIONS

SCALE :

DRAWING TITLE :
AGM TABLE

Signature of contractor

DRAWINGS GIVEN ABOVE ARE INDICATIVE FOR THE PURPOSE OF TENDERING. FINAL APPROVED DRAWINGS “ VALID FOR EXECUTION” WILL BE GIVEN BY CONSULTING ARCHITECTS/ BANK.

Signature of contractor